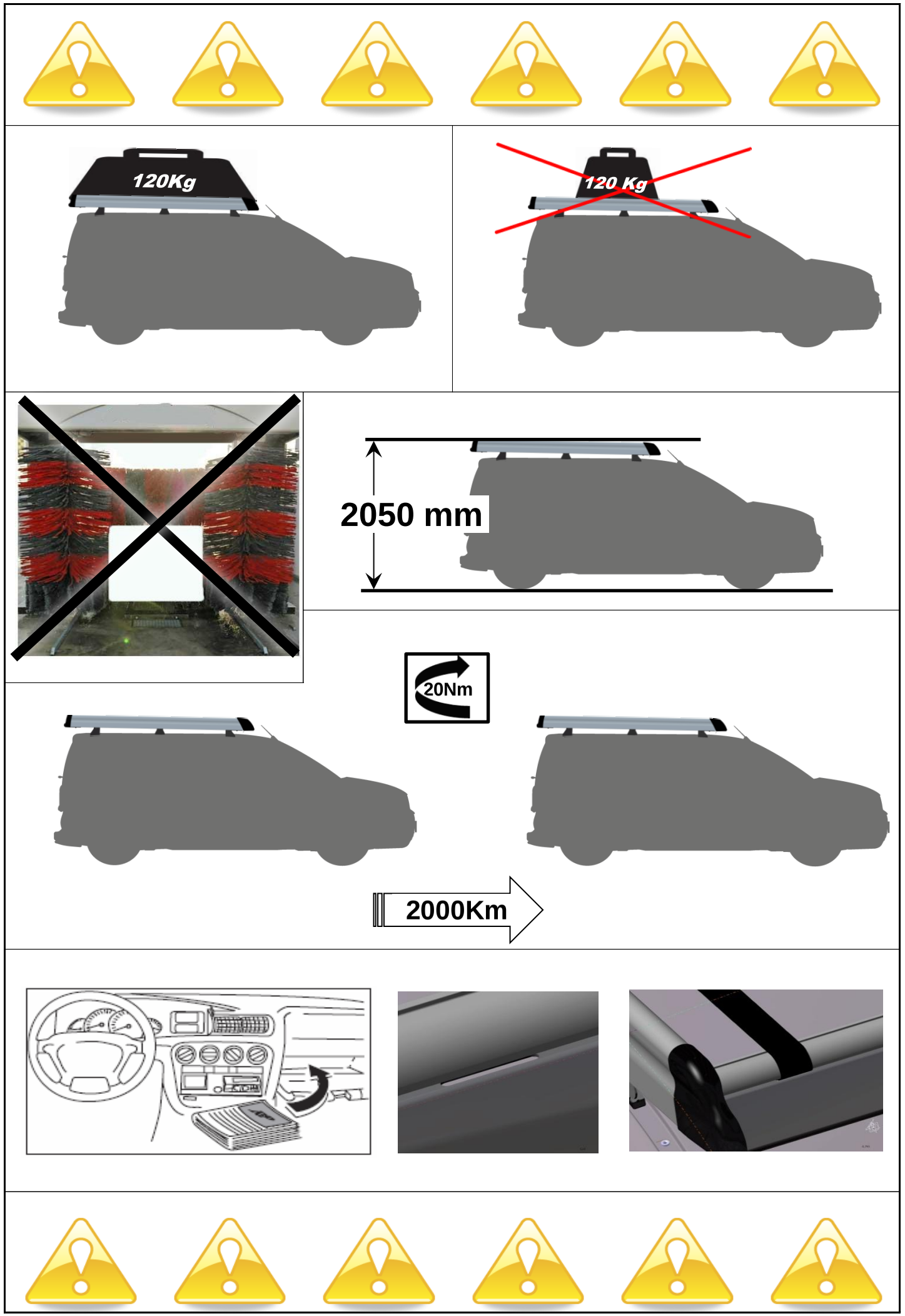

Feet Kit

Fitting instructions
Type: 9078862
Make: Peugoeot/Citroën/Opel
Partner L1 2018->
Berlingo L1 2018->
Combo L1 2018->

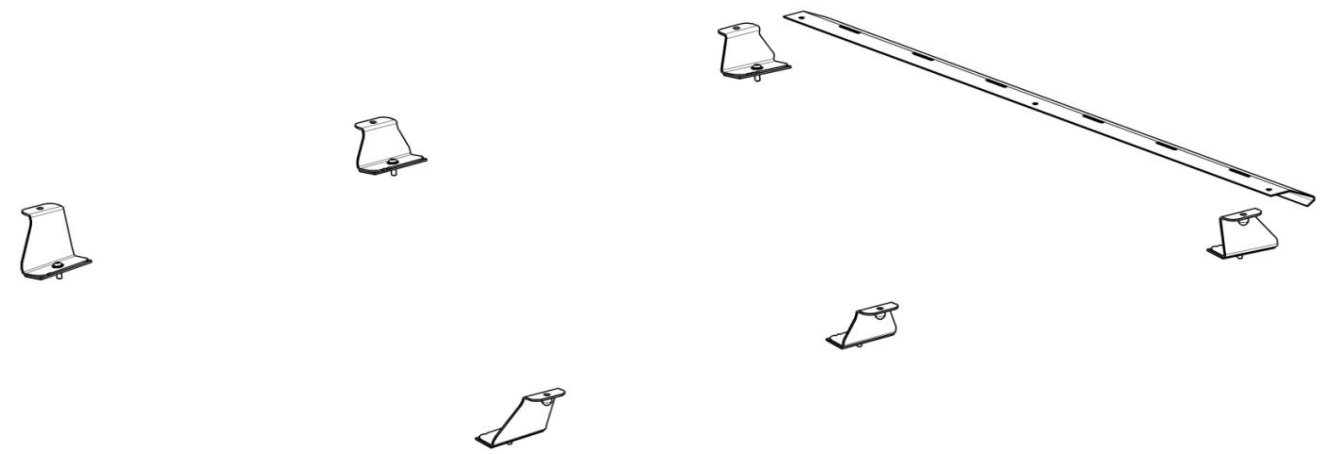

NL Montagehandleiding
GB Fitting instruction
D Montageanleitung
F Instruction de montage
S Monteringsanvisningar
DK Montagevejledning
E Instruccines de montaje
I Istrzioni per il montaggio
PL Instrukcja montażu
SF Asennusohjeet
CZ Pokyny k montáži
H Szerelési útmutató
RUS Руководство для монтажа

BRiNK

Your perfect fit
brink.eu

© 9778862/19-02-2019/8

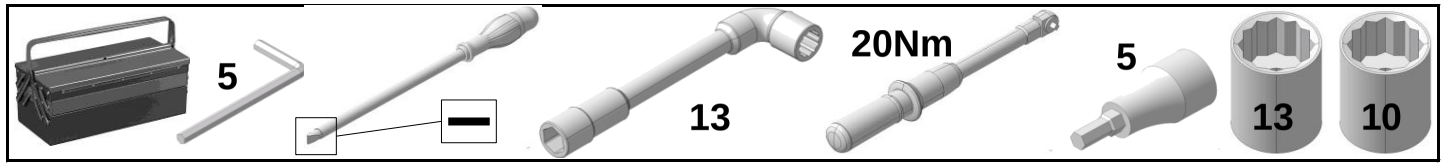
5
13
20Nm
5
13
10

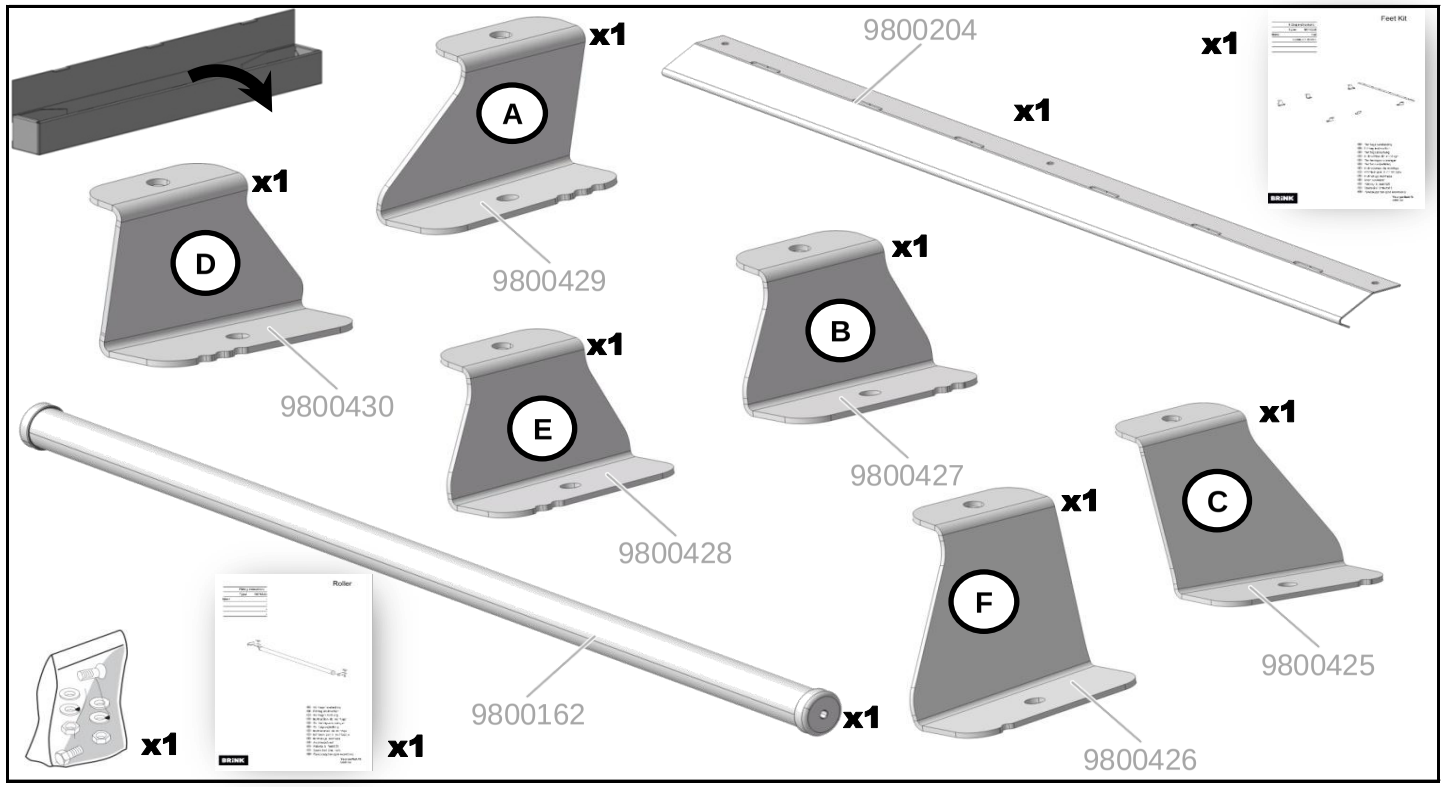
x1
A
9800204
x1
x1
x1
D
9800429
x1
B
9800430
x1
E
9800427
x1
C
9800428
x1
F
9800425
9800162
x1
x1
x1
9800426

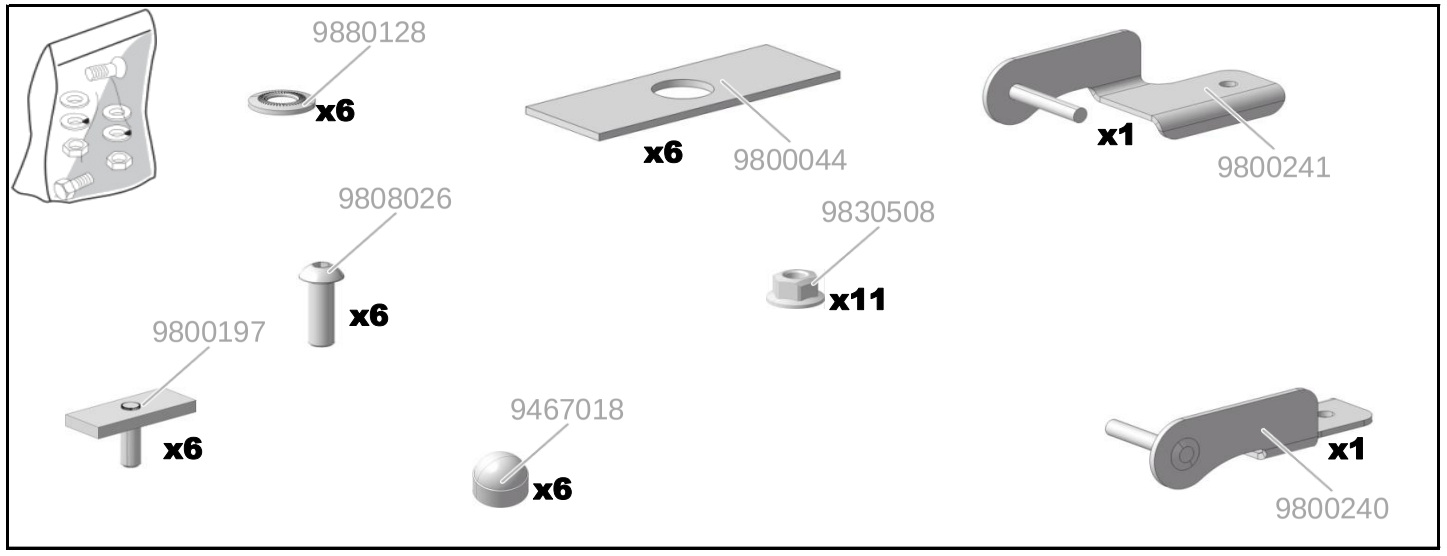
9880128
x6
x6
9800044
x1
9800241
9808026
x6
9830508
x11
9800197
x6
9467018
x6
x1
9800240

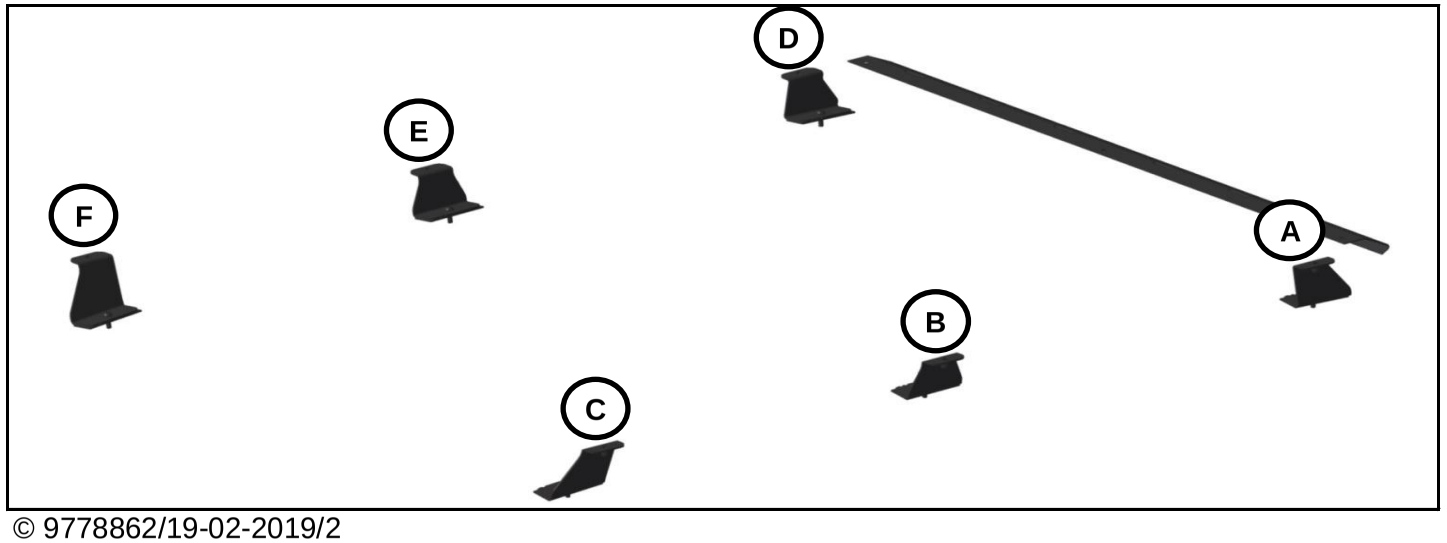
D
E
F
A
B
C

12

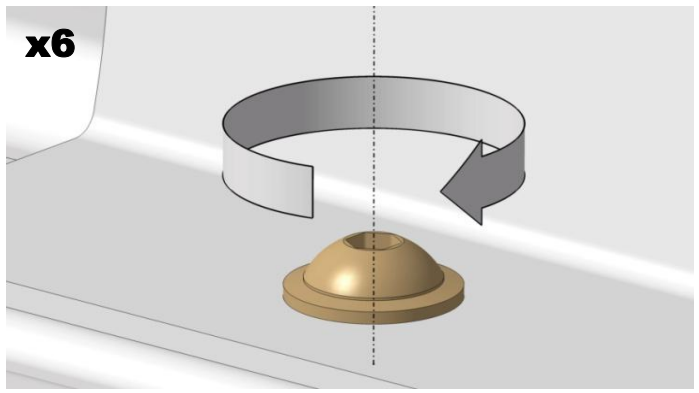
x6

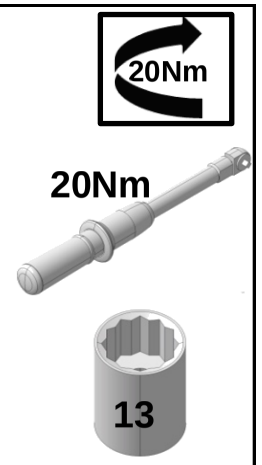
20Nm
20Nm
13

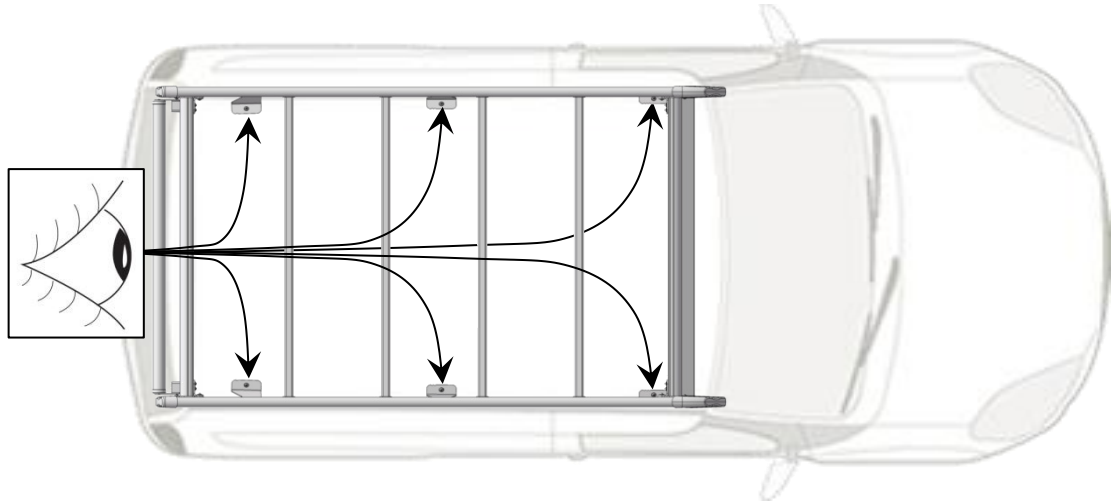

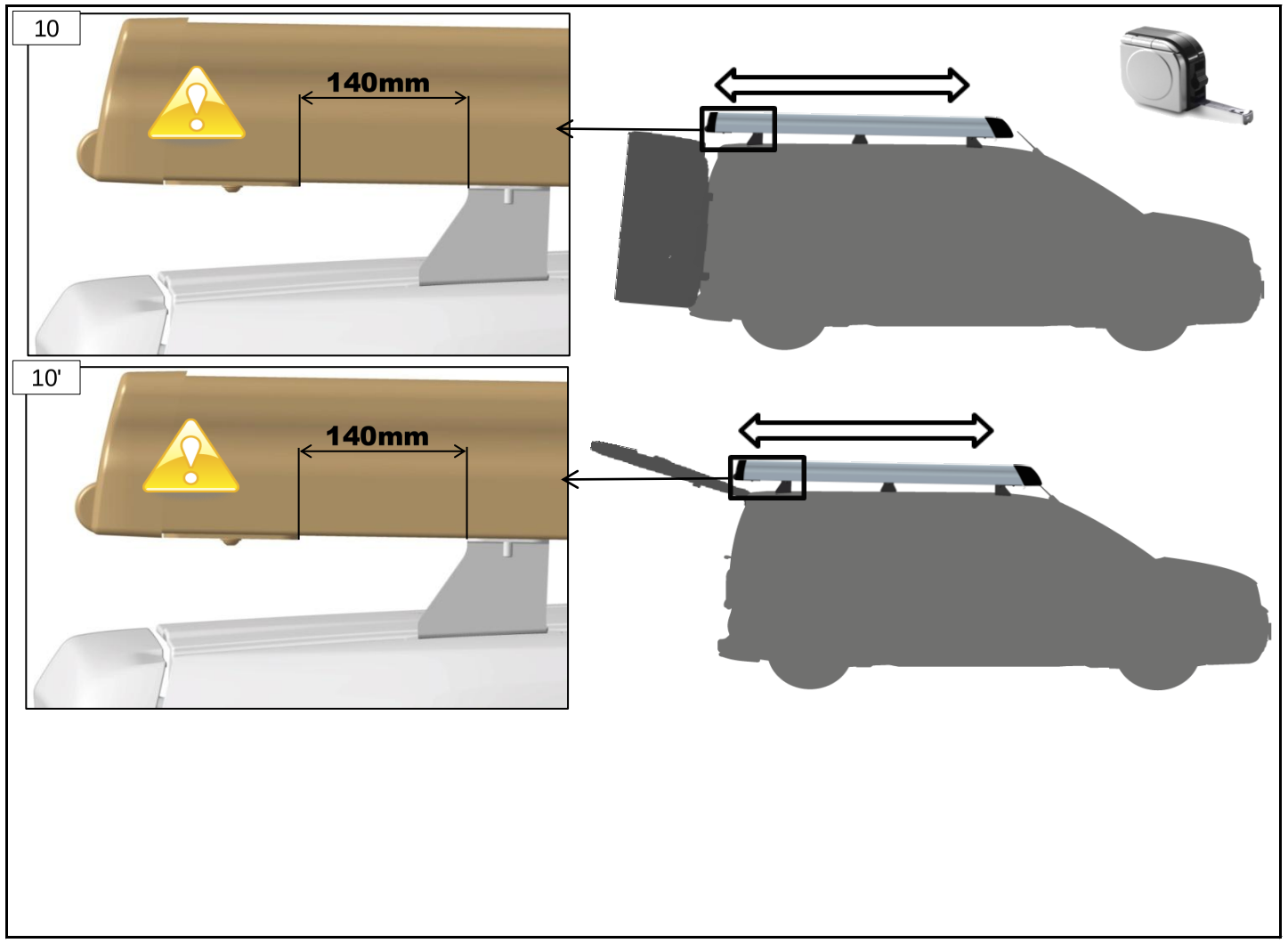

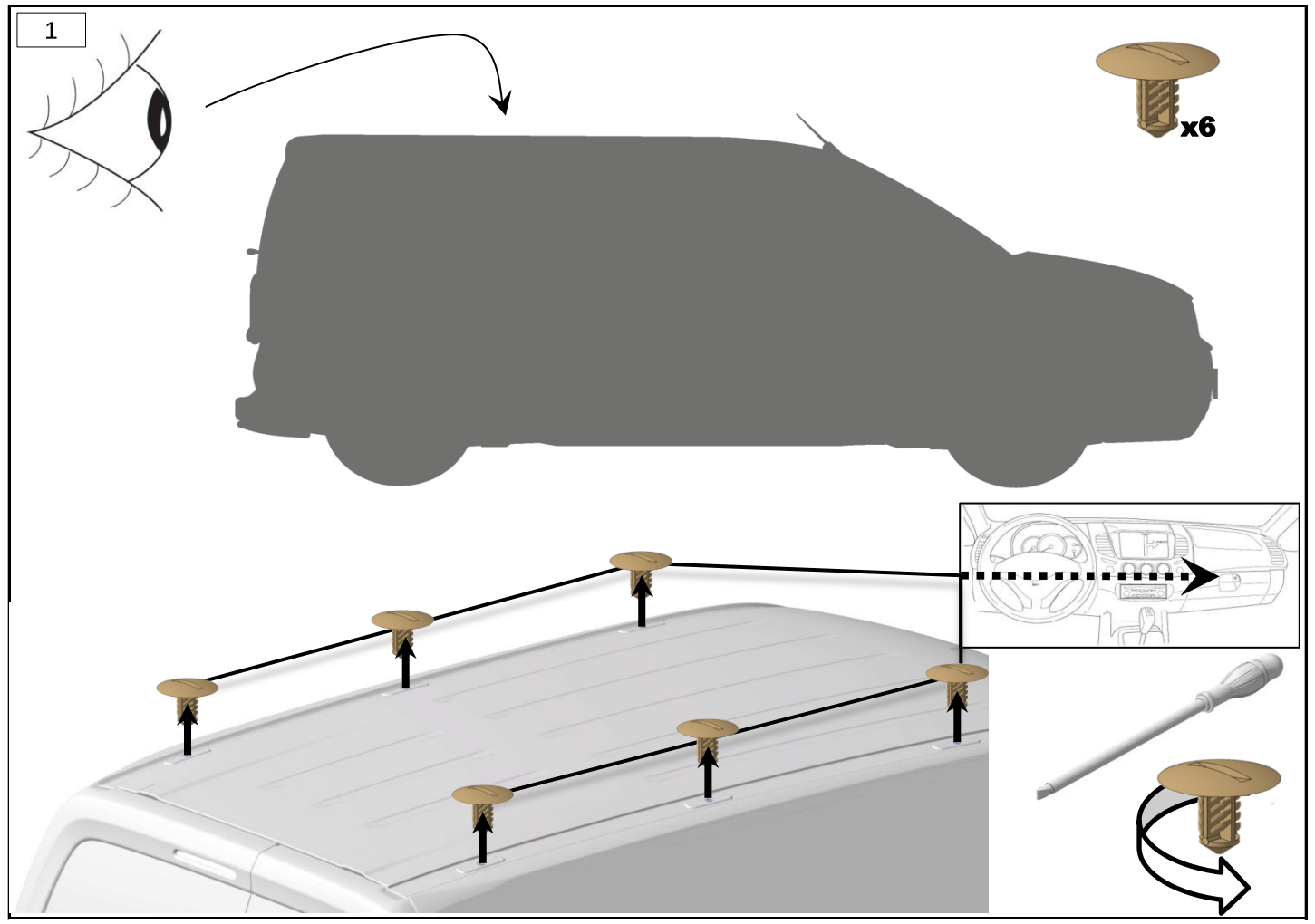

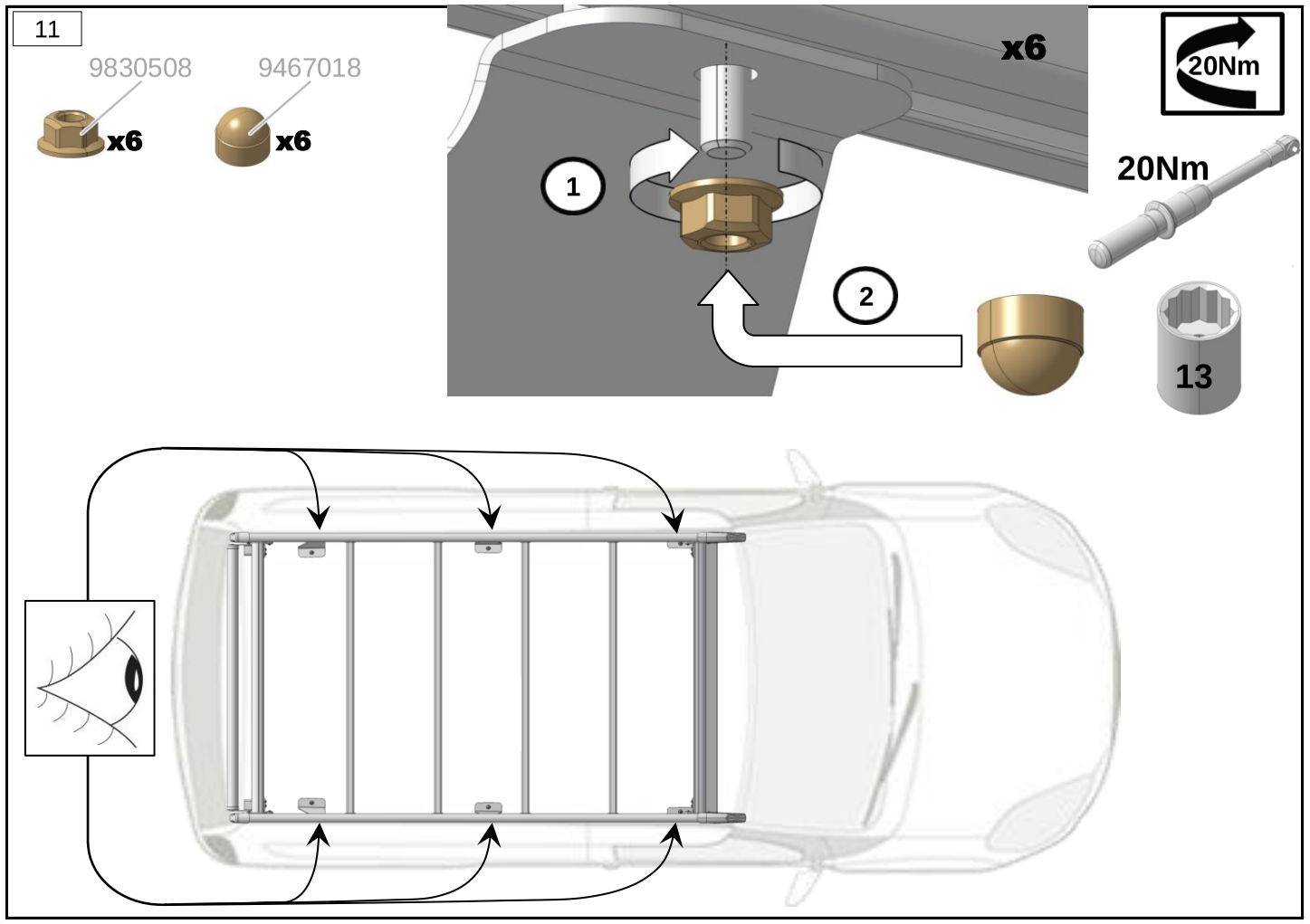

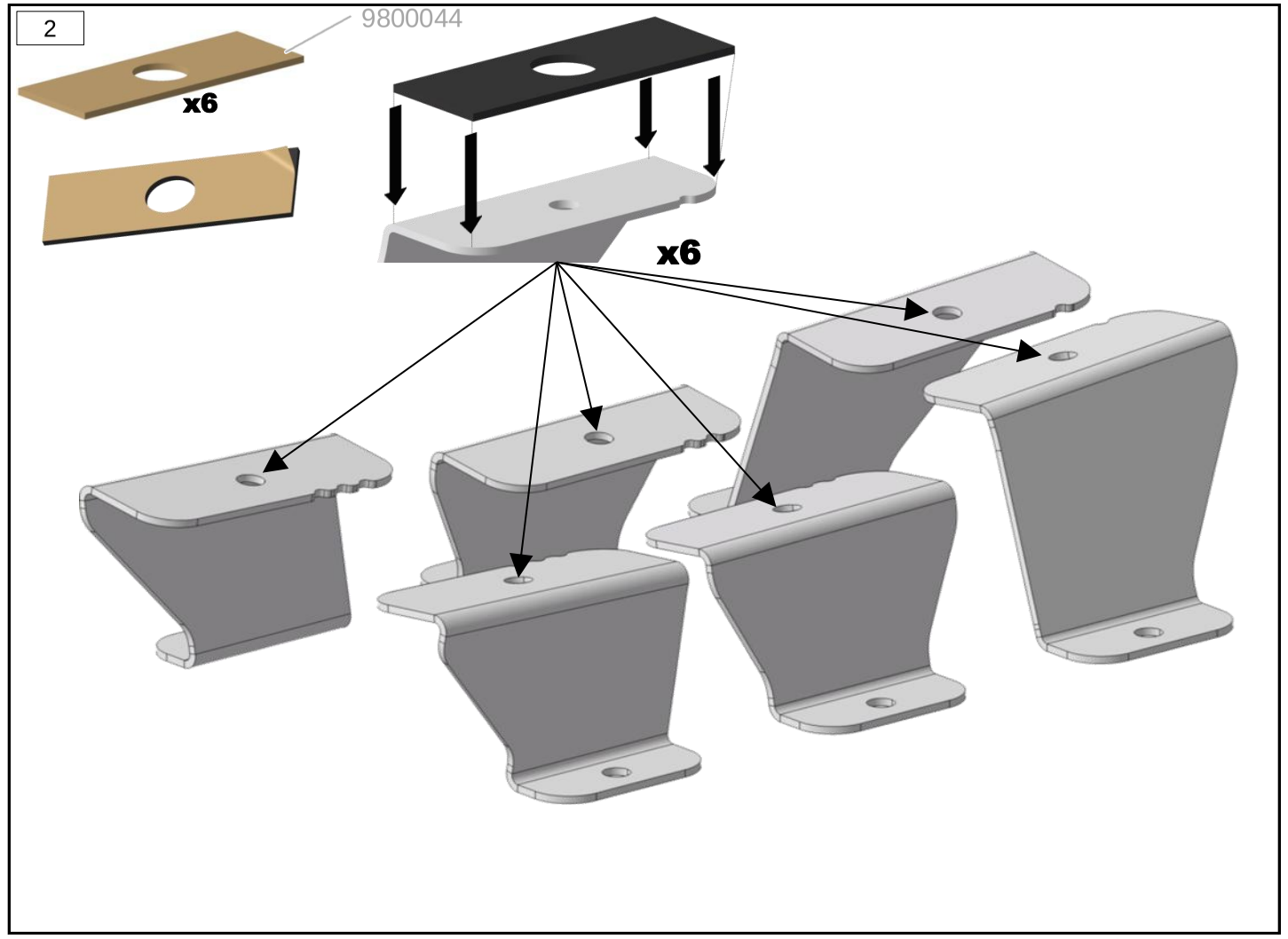

© 9778862/19-02-2019/6

© 9778862/19-02-2019/3

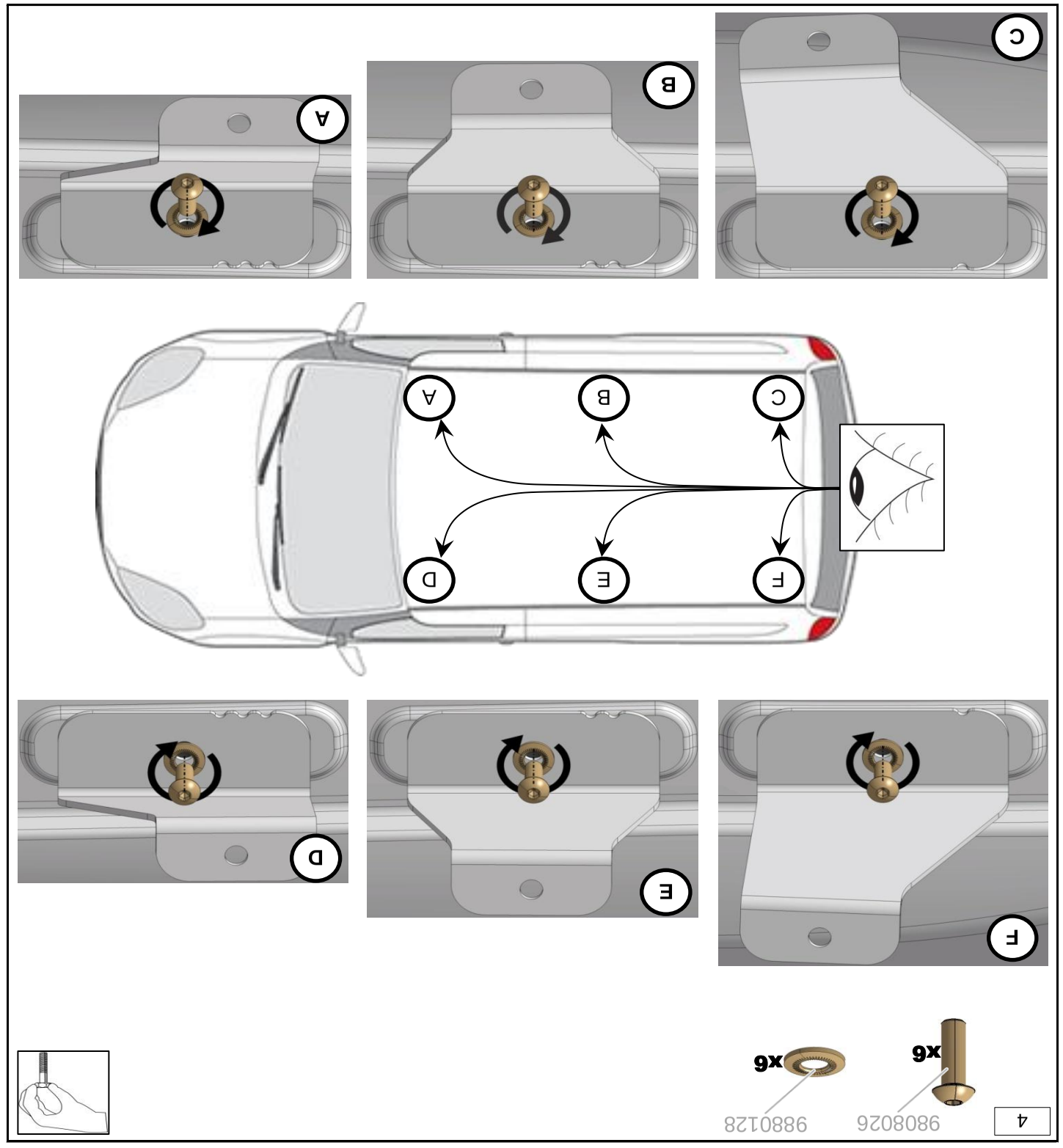
4
9808026
x6
9880128
x6
F
E
D
C
B
A

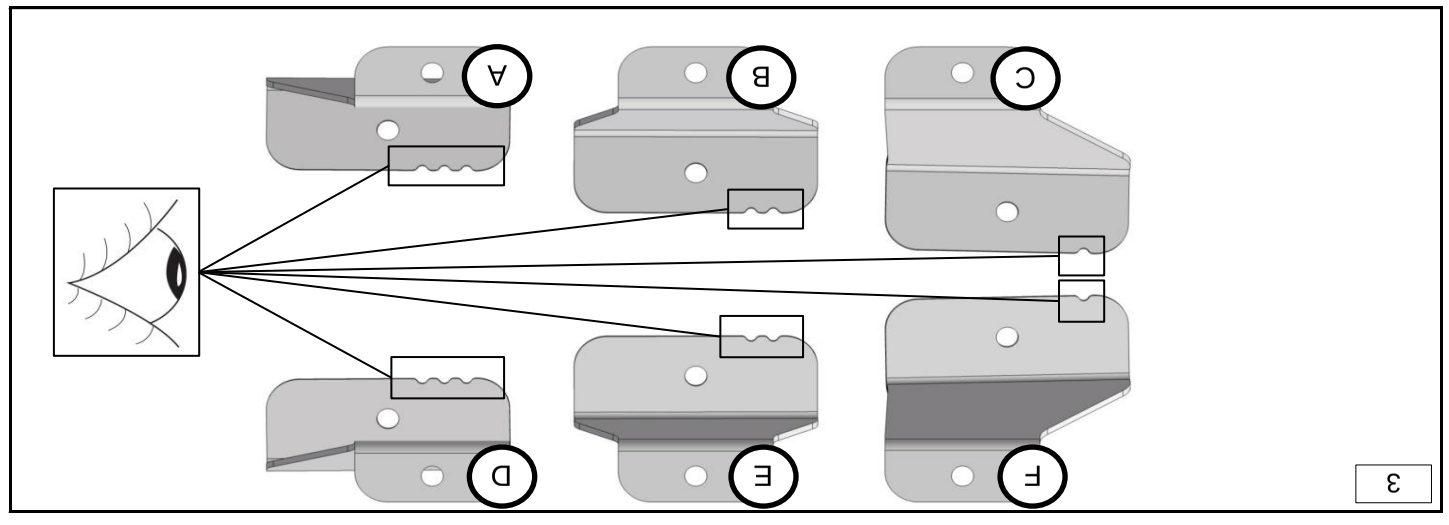
3
F
E
D
C
B
A

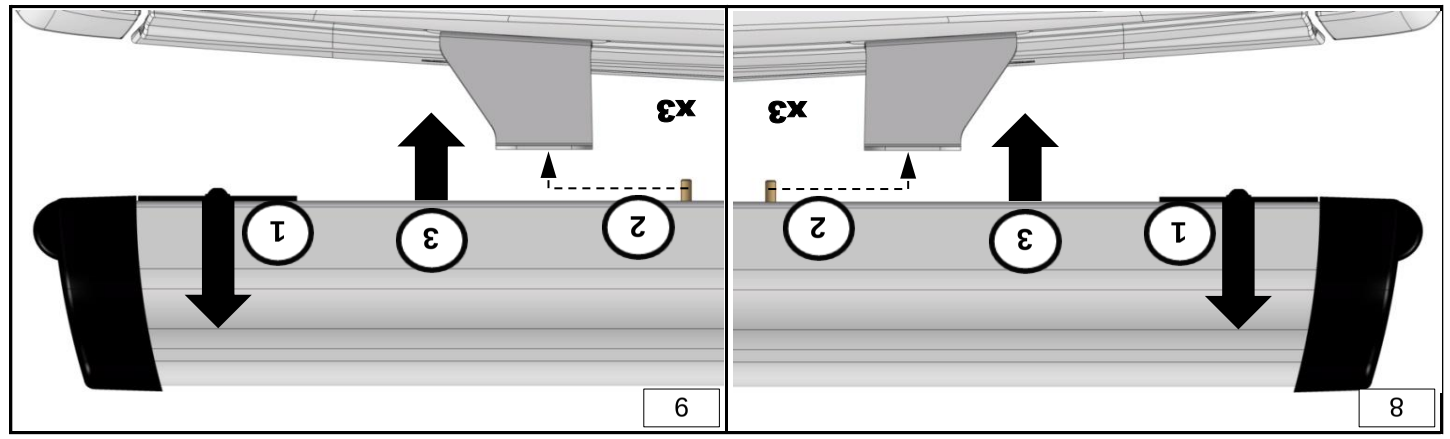
8
1
3
2
x3
9
1
3
2
x3

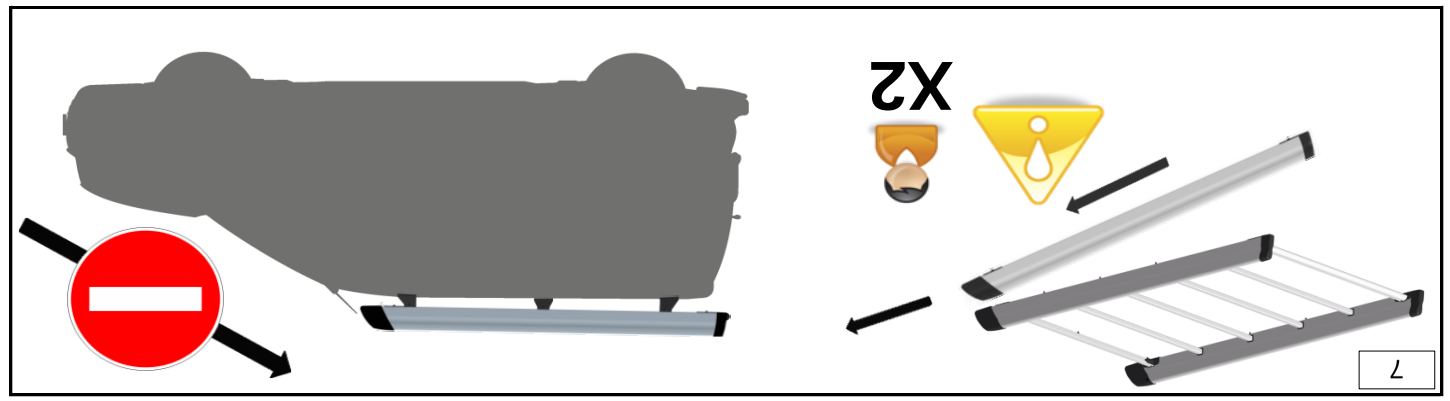
7
X2

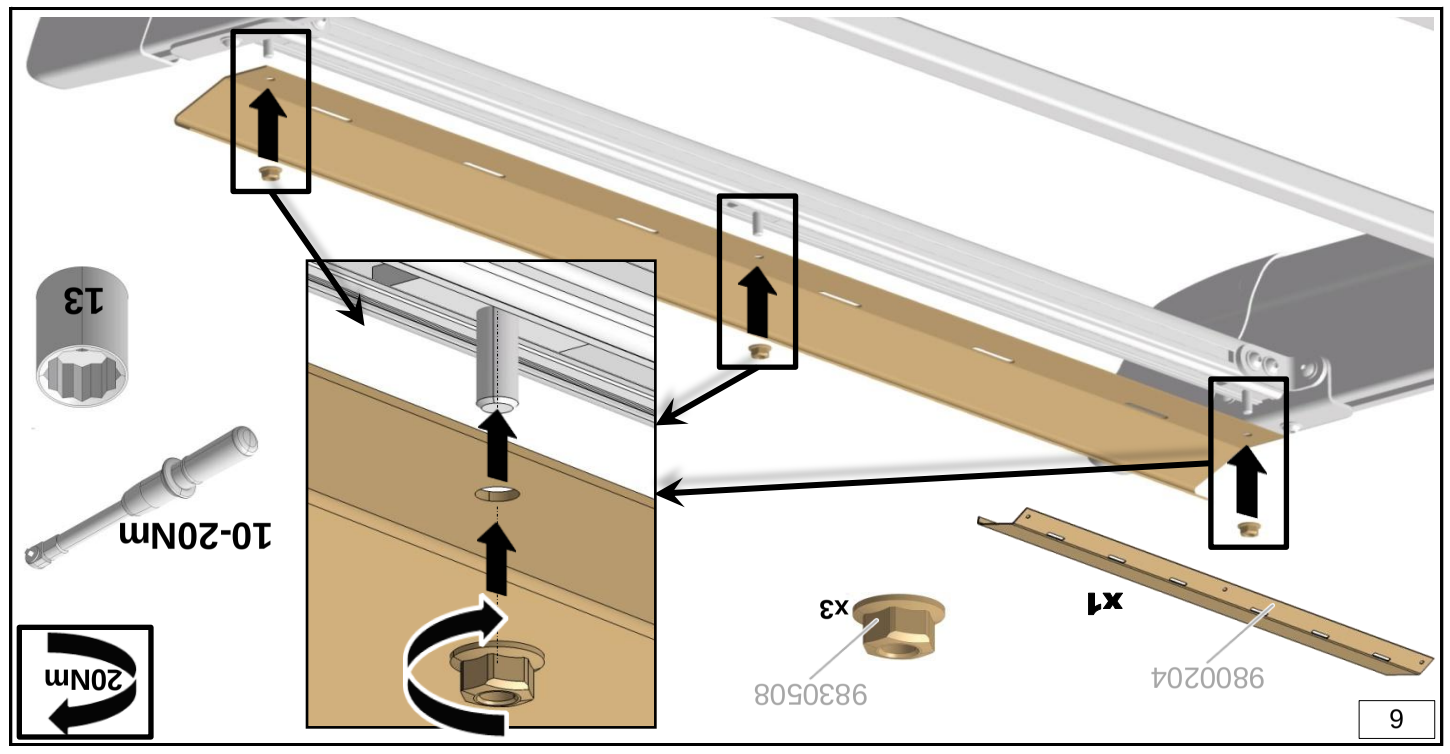
6
9800204
x1
9830508
x3
20Nm
10-20Nm
13

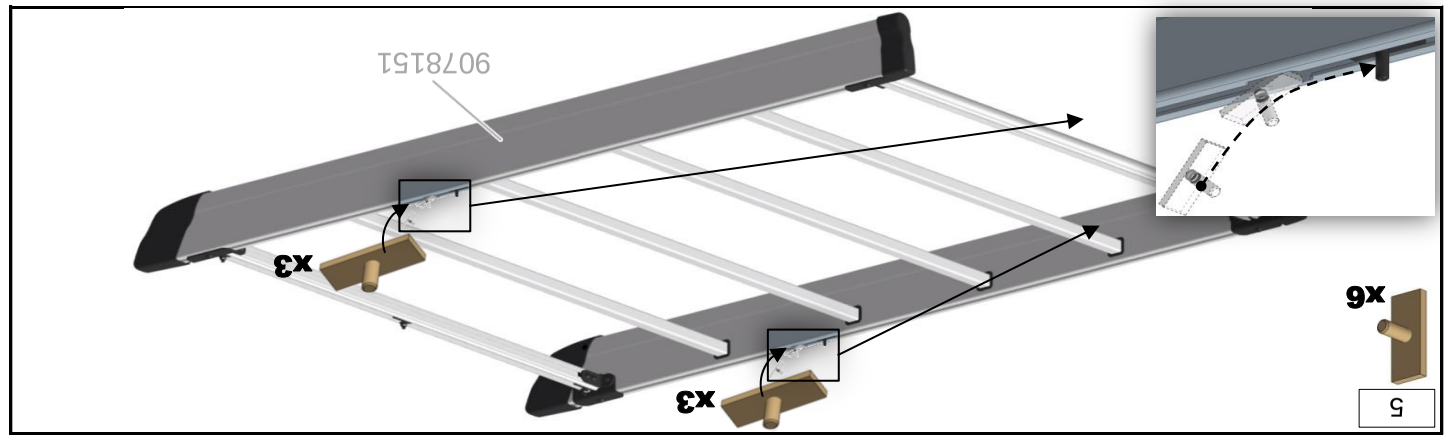
5
x6
x3
x3
9078151