(LW004) x 1

PS054 x 1

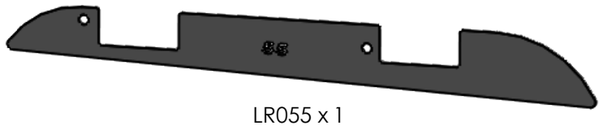
LR055 x 1

(LW005) x 1

PS055 x 1

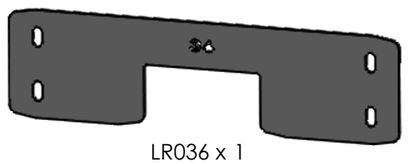
LR036 x 1

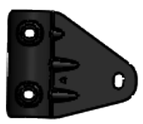
LR005 x 2

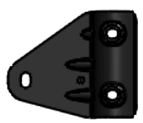
LR006 x 2

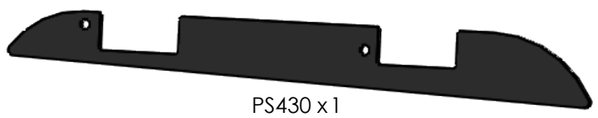
PS430 x 1

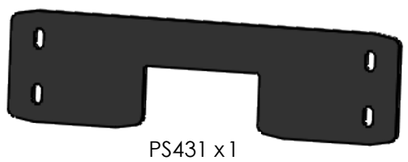
PS431 x 1

(1:1)

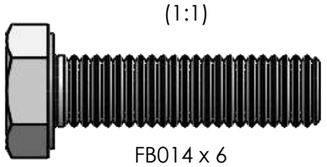
FB014 x 6

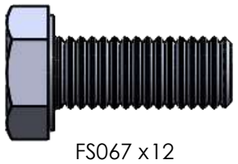
FS067 x12

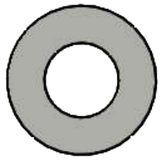
FW021 x 28

FN080 x 10

PS414 x 18

PS065 x 4

PS419 x 12

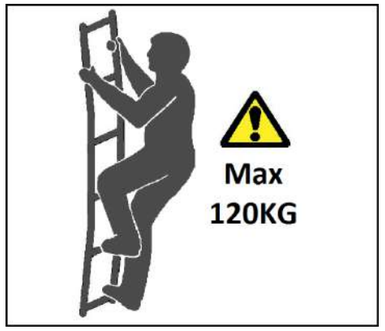

13mm x 2

4mm x 1

9mm x 1

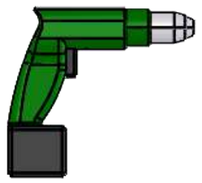

1.

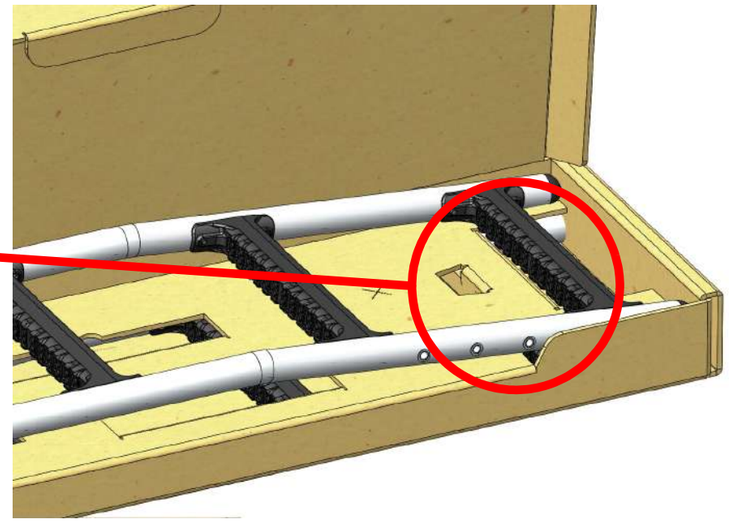

2.

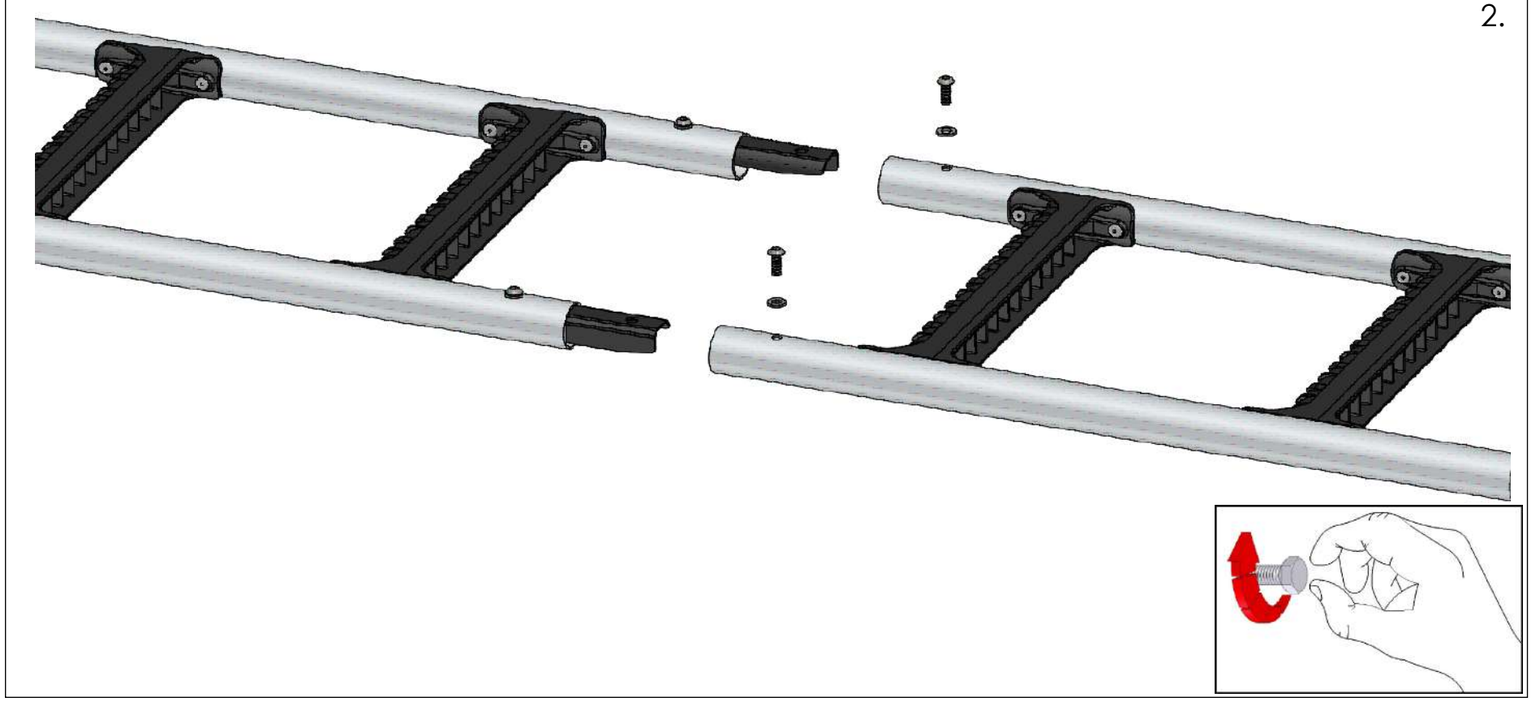

3.

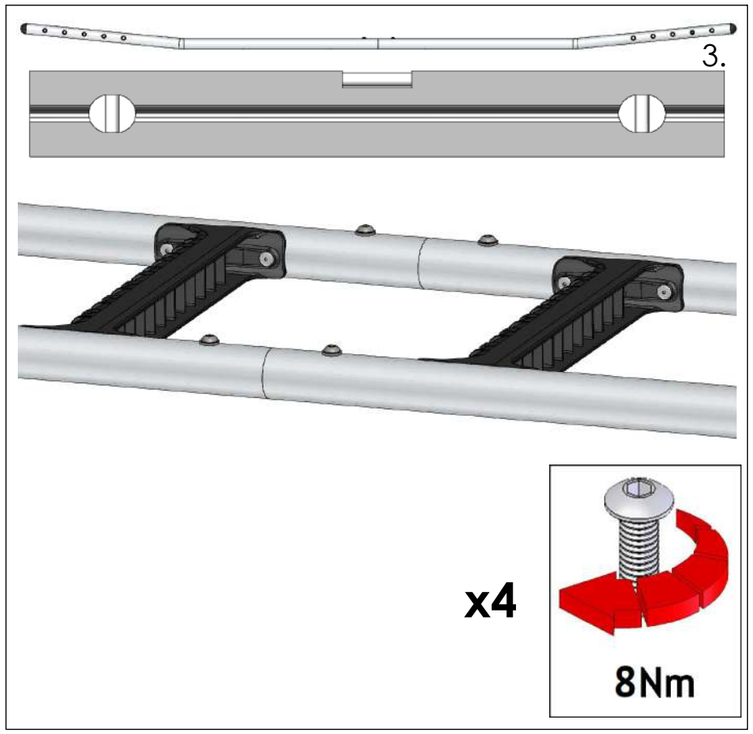

4.

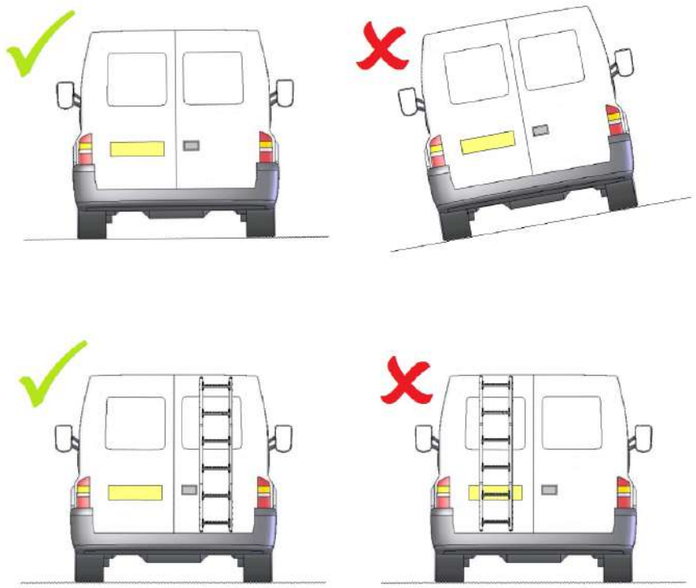

5.

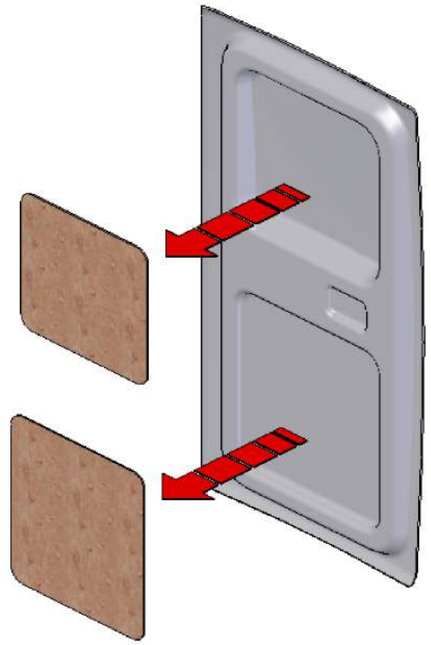

6.

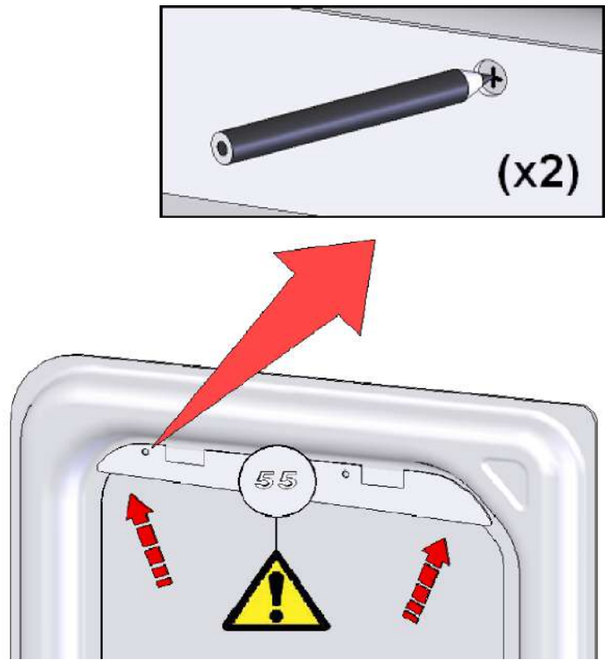

7.

∅4mm (x 2)

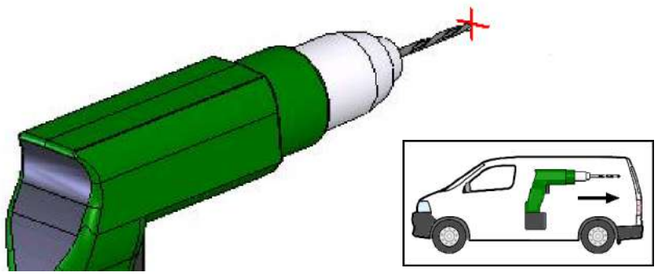

∅9mm (x 2)

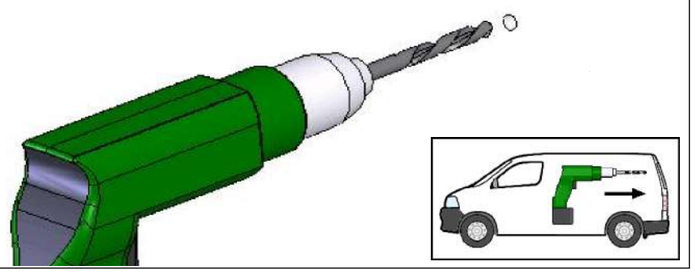

8.

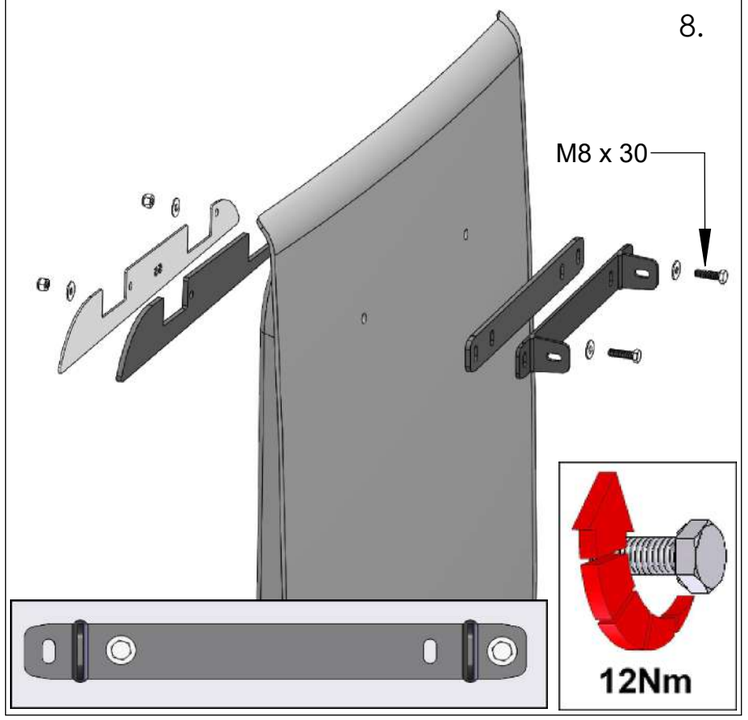

9.

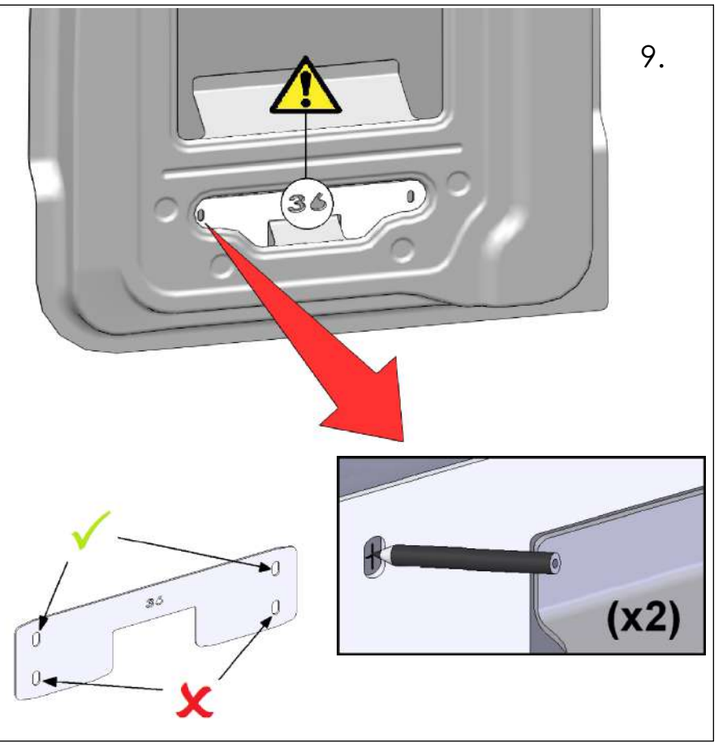

10.

∅4mm (x 2)

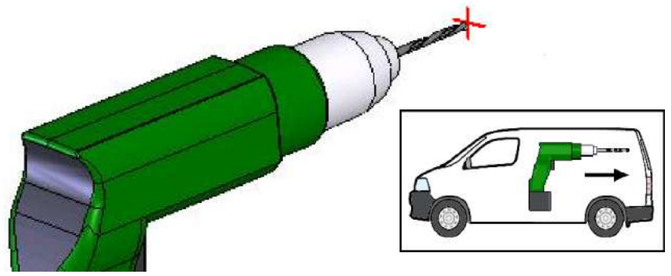

∅9mm (x 2)

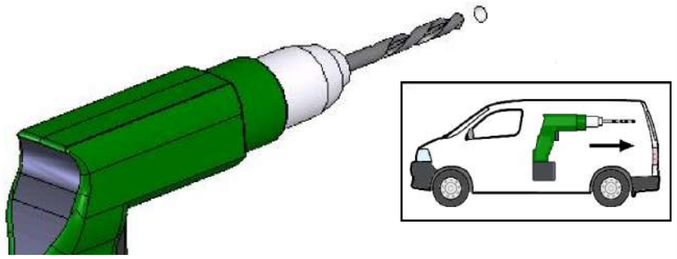

11.

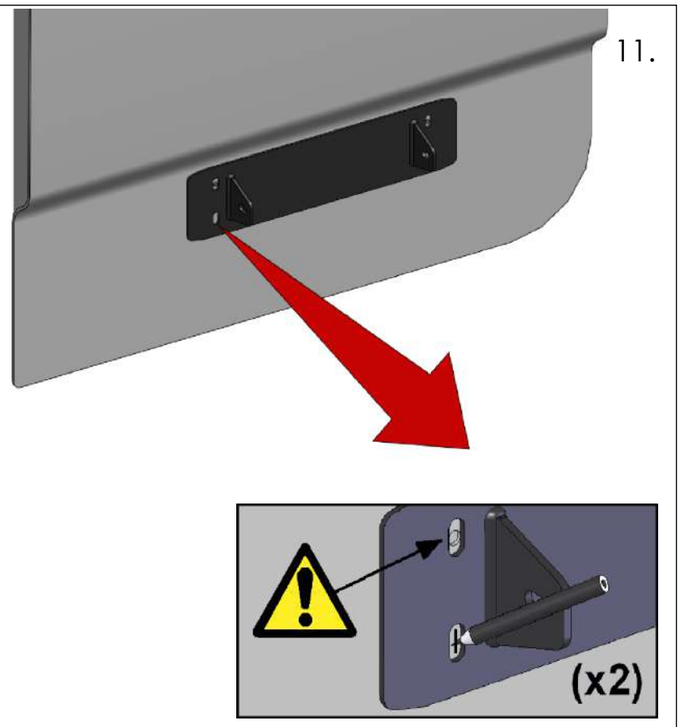

12.

∅4mm (x 2)

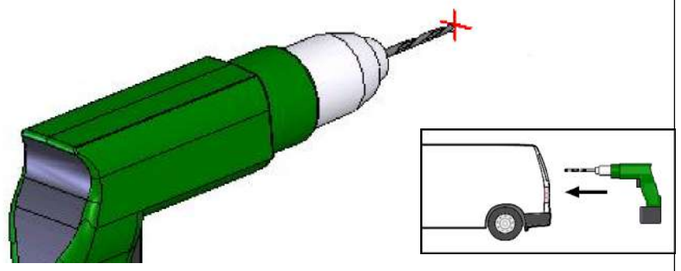

∅9mm (x 2)

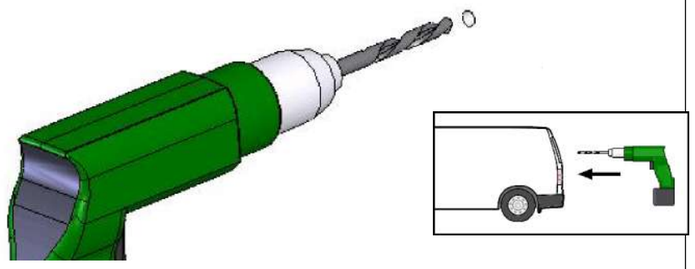

13.

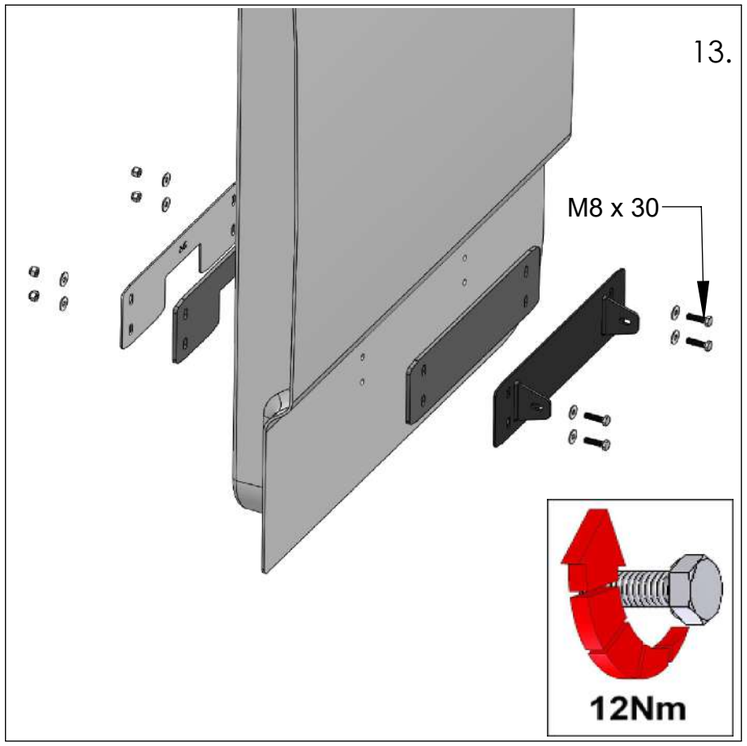

14.

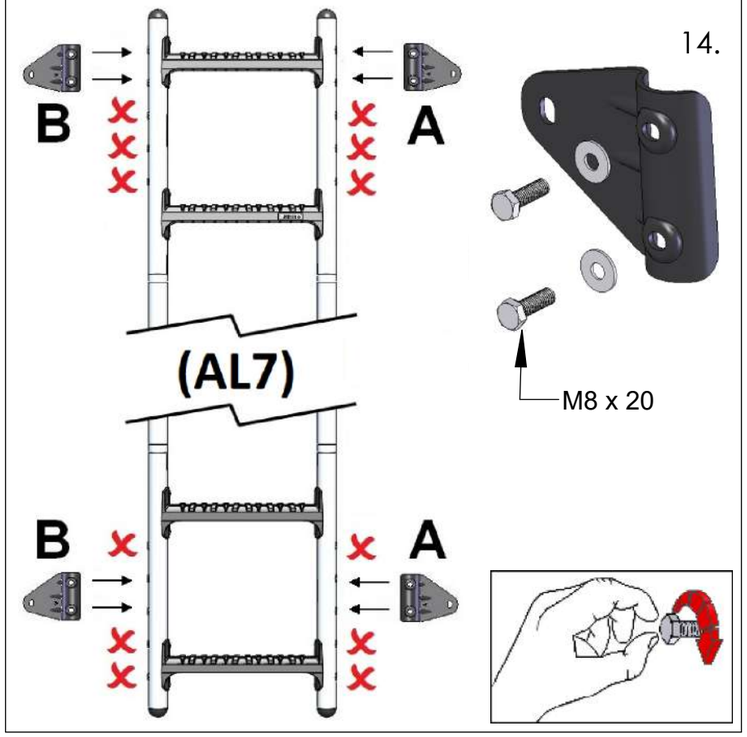

15.

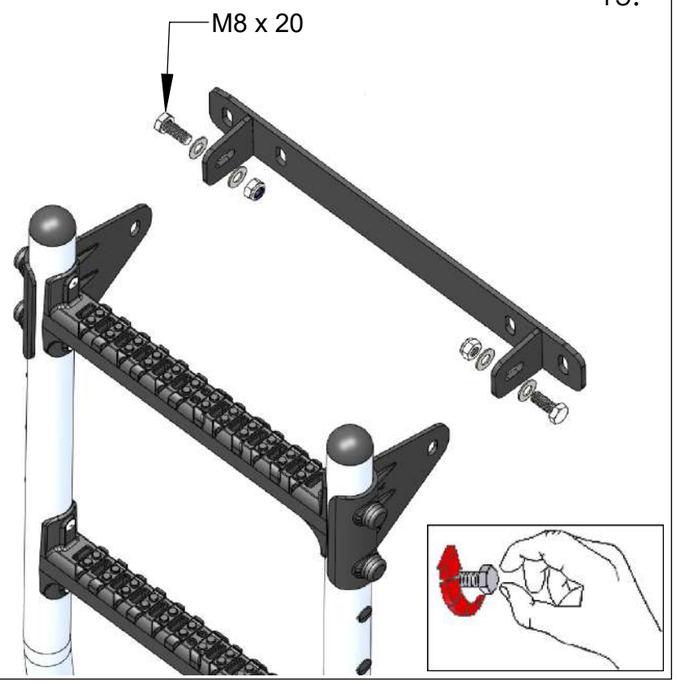

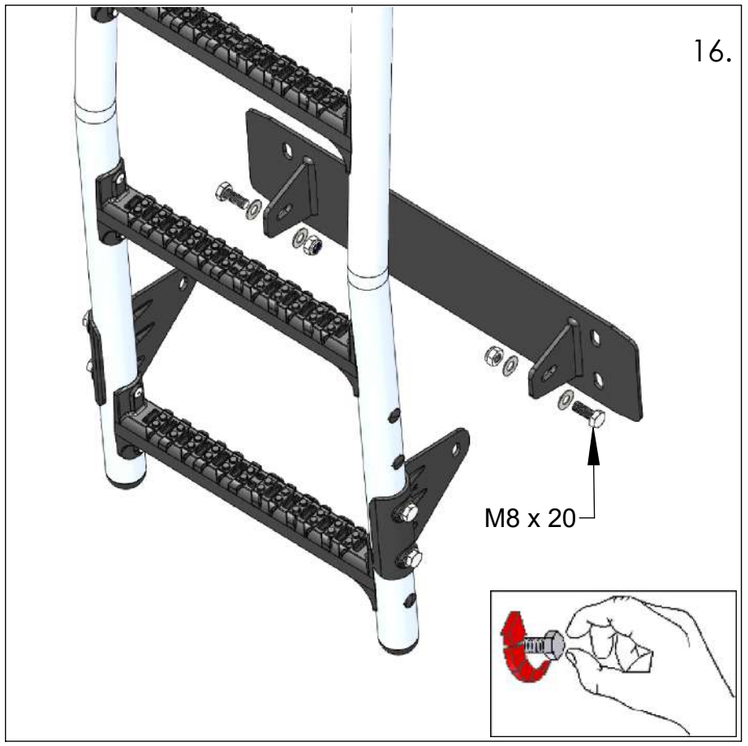
16.
M8 x 20

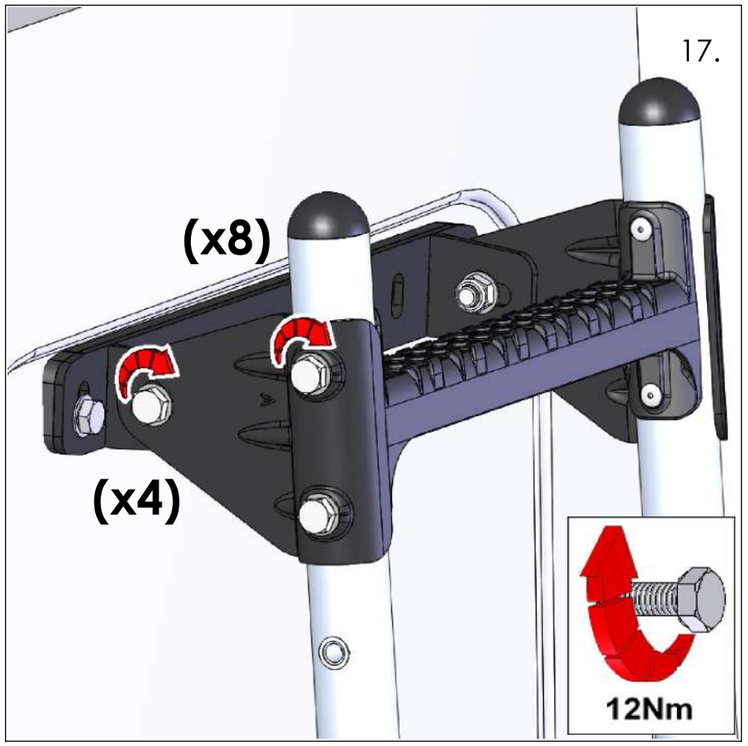
17.
(x8)
(x4)
12Nm

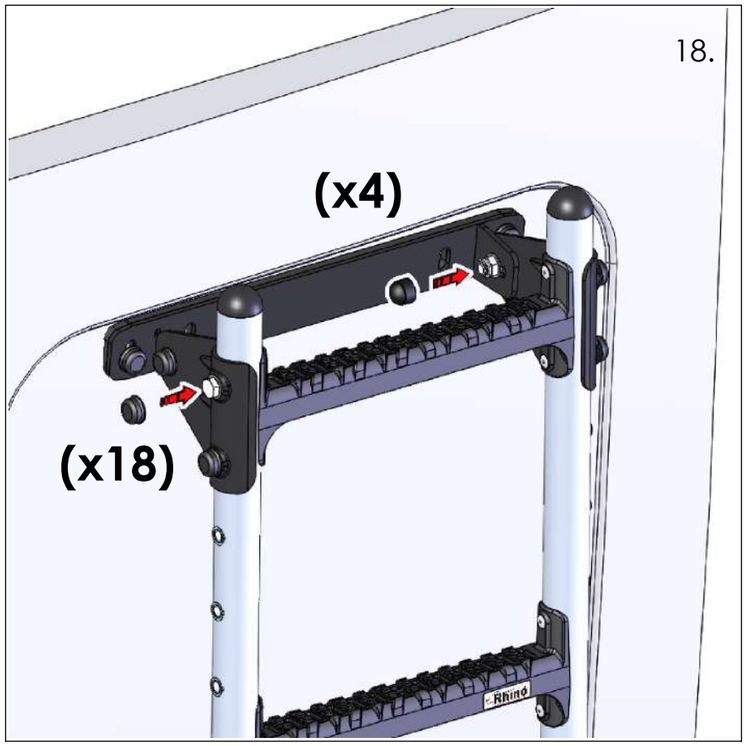
18.
(x4)
(x18)

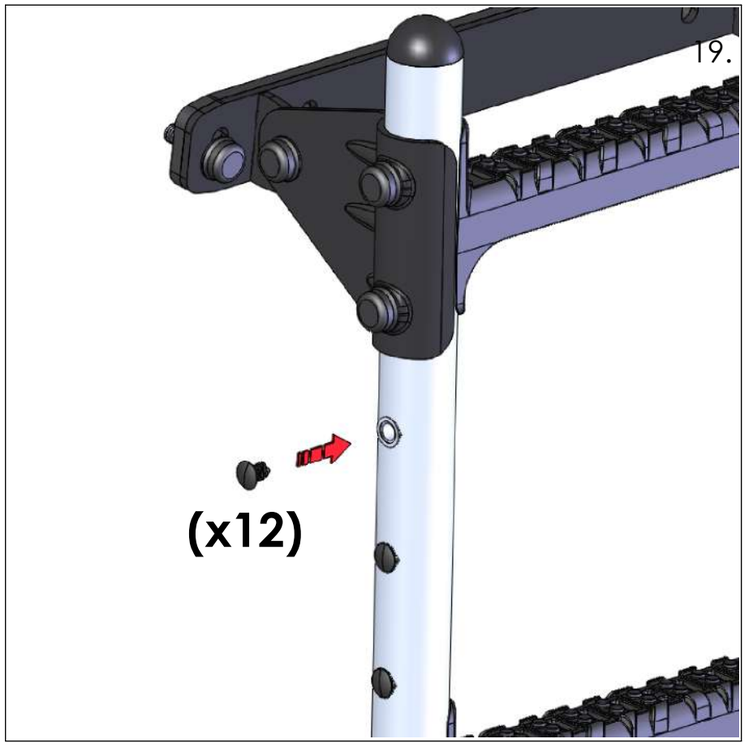
19.
(x12)

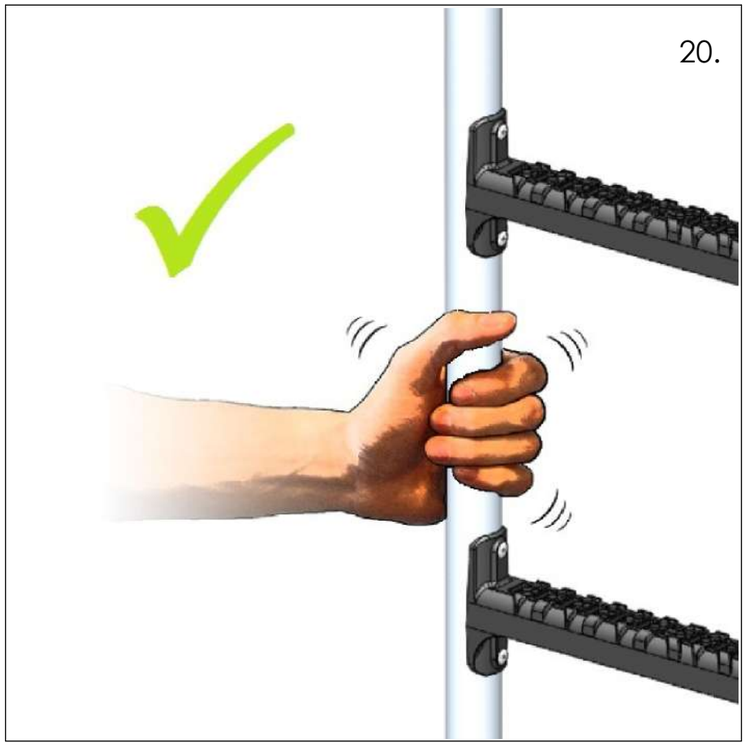
20.