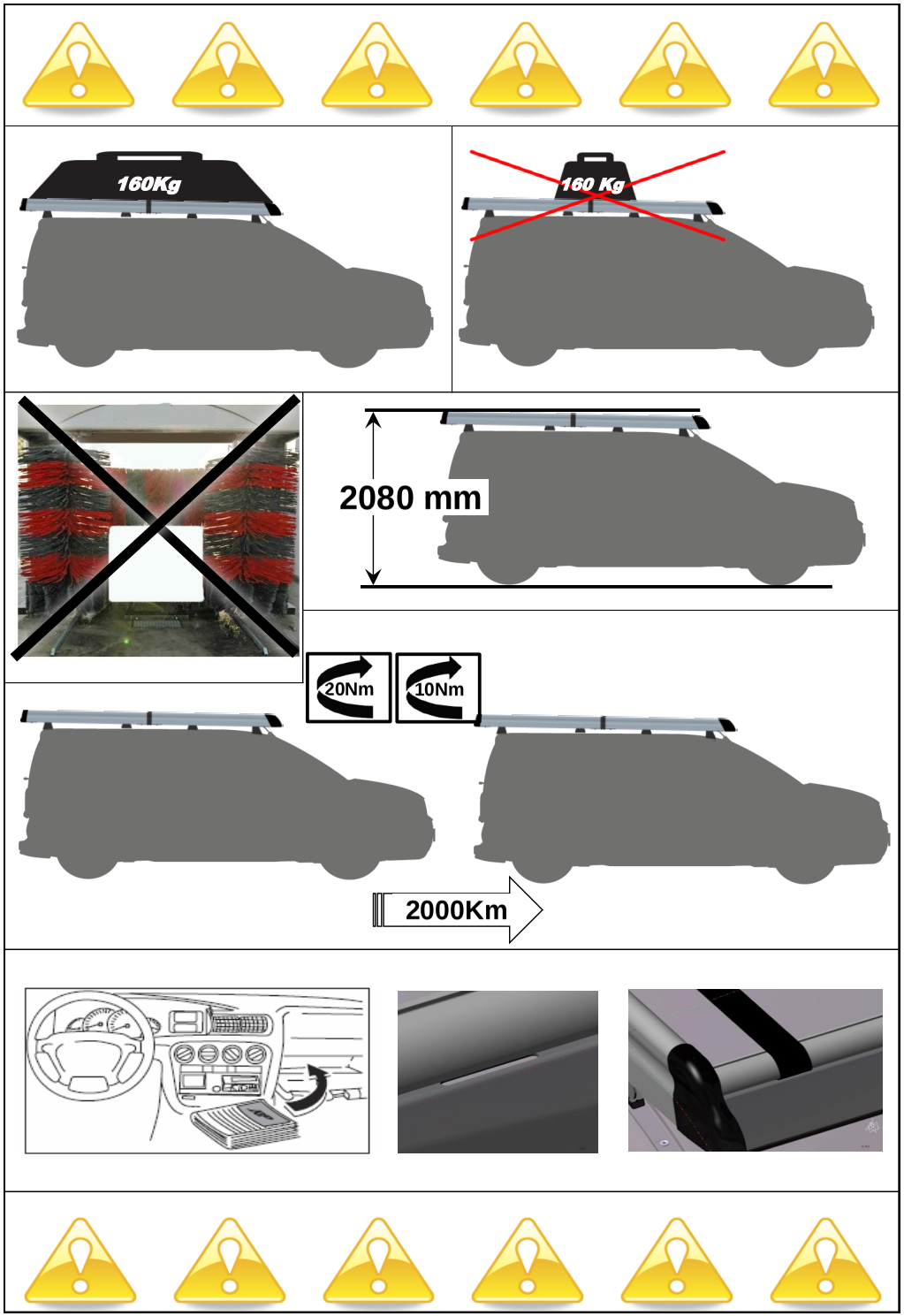

© 9778846/29-05-2019/8

Feet Kit

	Fitting instructions
	Type: 9078846
Make:	Mercedes
	Vito L1 2013->

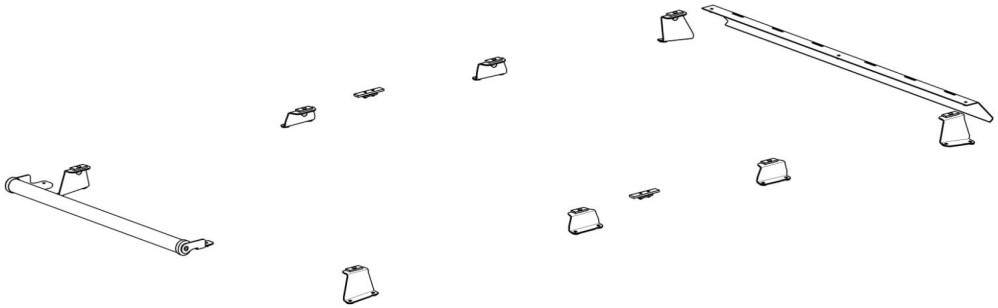

NL Montagehandleiding
GB Fitting instruction
D Montageanleitung
F Instruction de montage
S Monteringsanvisningar
DK Montagevejledning
E Instruccines de montaje
I Istrzioni per il montaggio
PL Instrukcja montażu
SF Asennusohjeet
CZ Pokyny k montáži
H Szerelési útmutató
RUS Руководство для монтажа

BRiNK

Your perfect fit
brink.eu

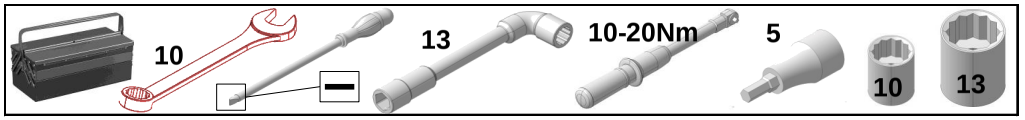
10
13
10-20Nm
5
10
13

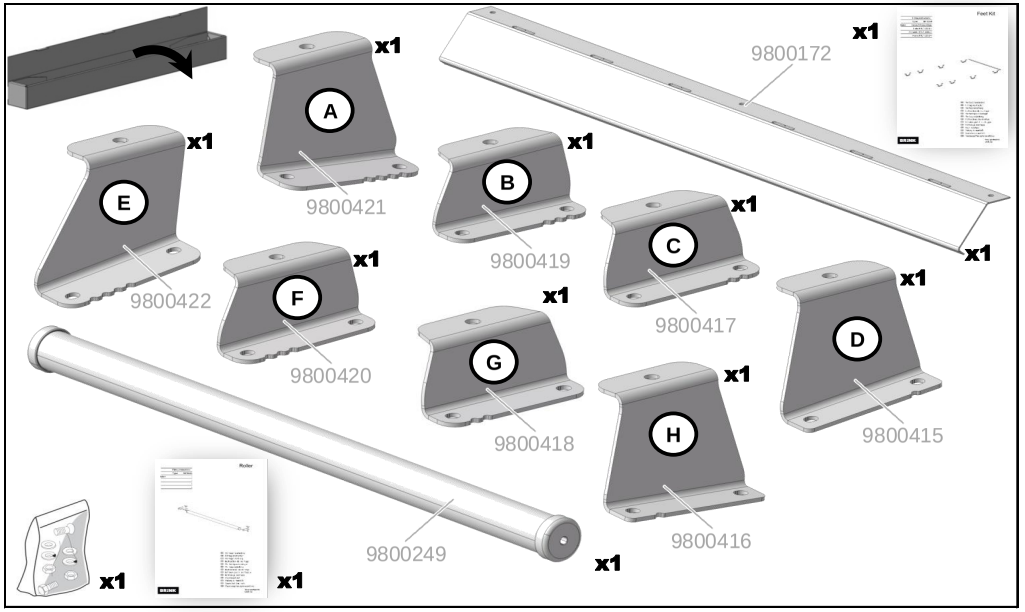
x1
A
9800421
x1
9800172
x1
x1
E
9800422
x1
B
9800419
x1
C
9800417
x1
F
9800420
x1
G
9800418
x1
D
9800415
x1
H
9800416
9800249
x1
x1
x1

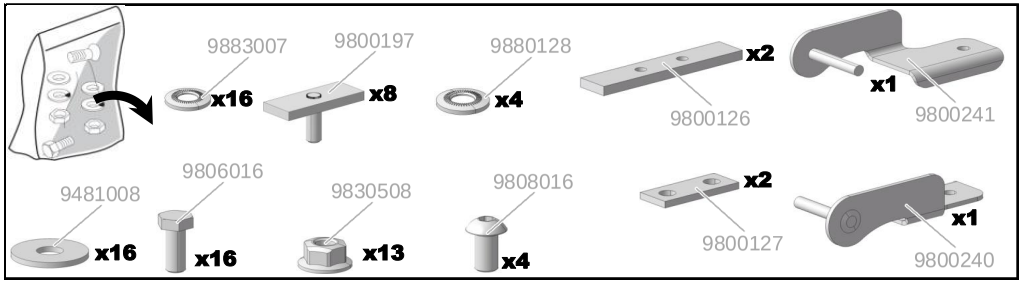
9883007
x16
9800197
x8
9880128
x4
x2
9800126
x1
9800241
9481008
x16
9806016
x16
9830508
x13
9808016
x4
x2
9800127
x1
9800240

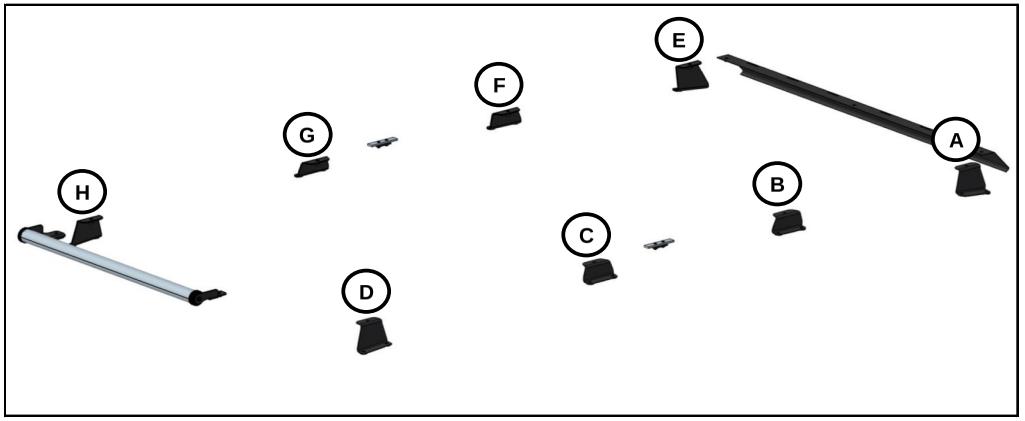
E
F
G
A
H
B
C
D

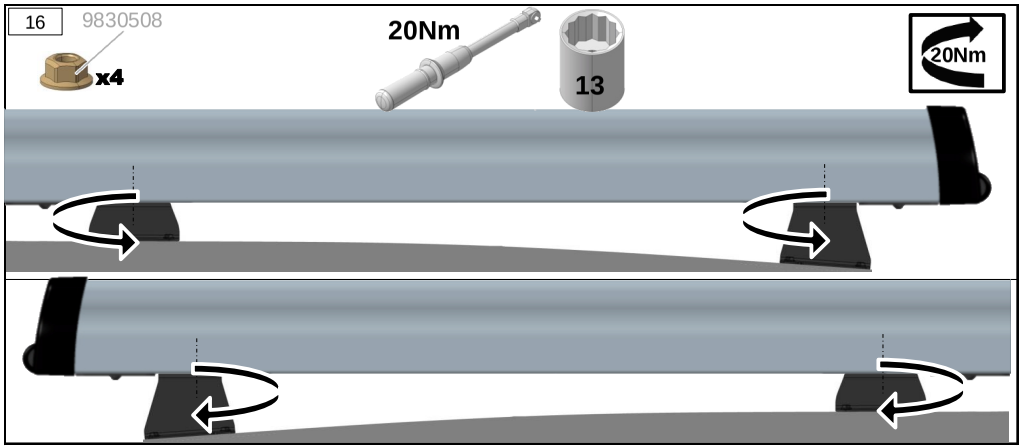
16
9830508
x4
20Nm
13
20Nm

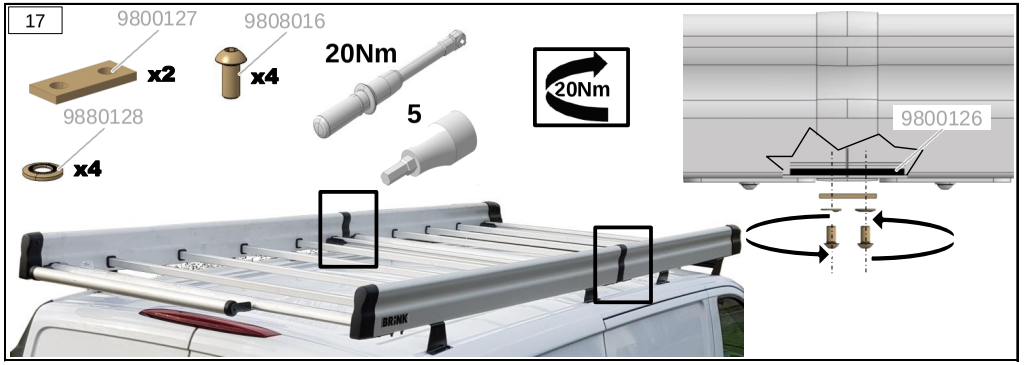
17
9800127
x2
9808016
x4
20Nm
5
20Nm
9880128
x4
9800126

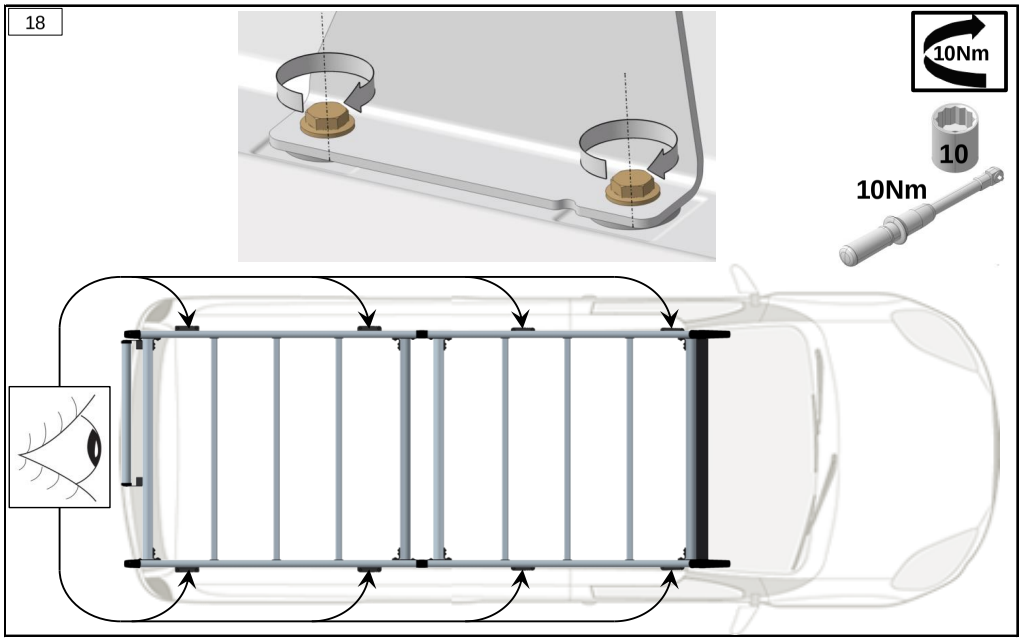
18
10Nm
10
10Nm

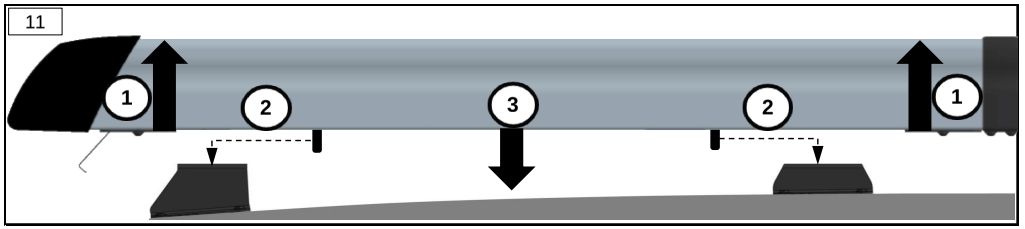

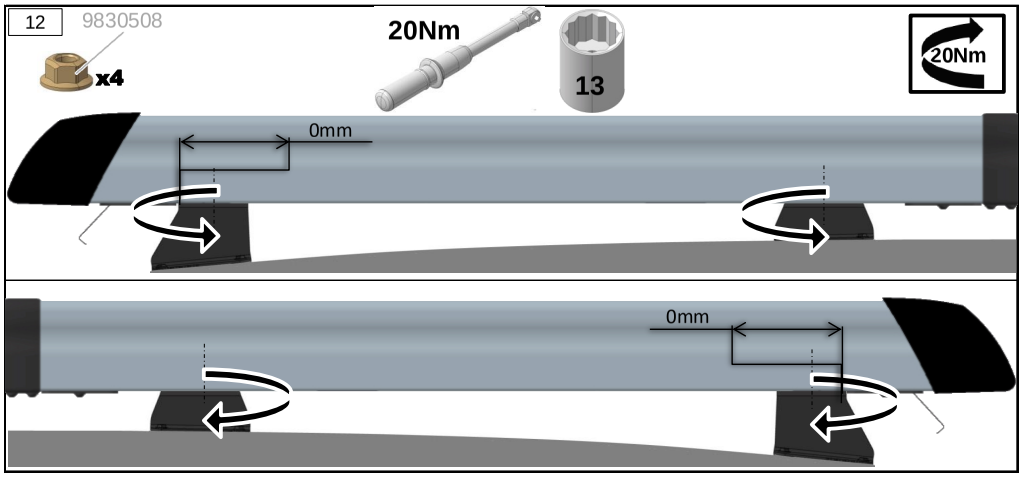

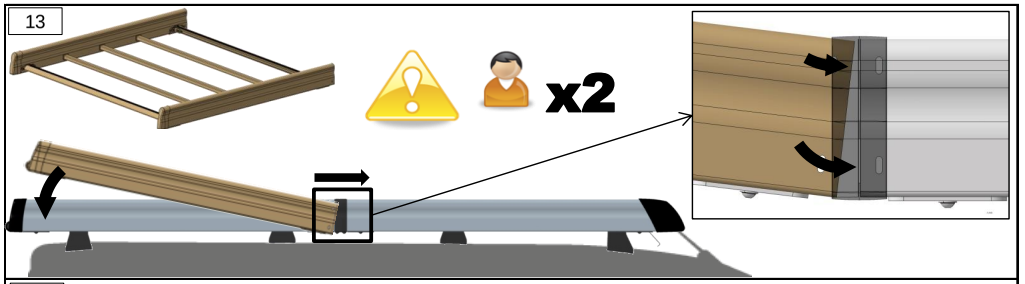

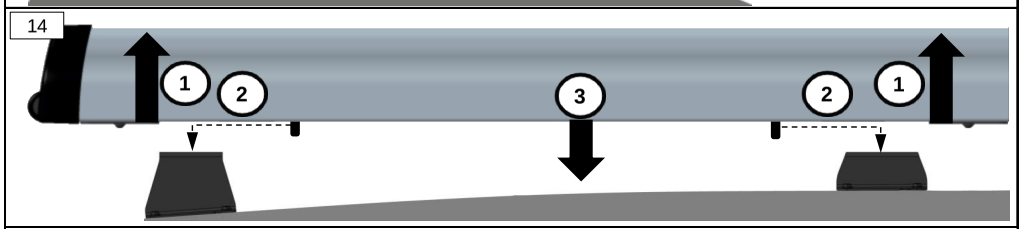

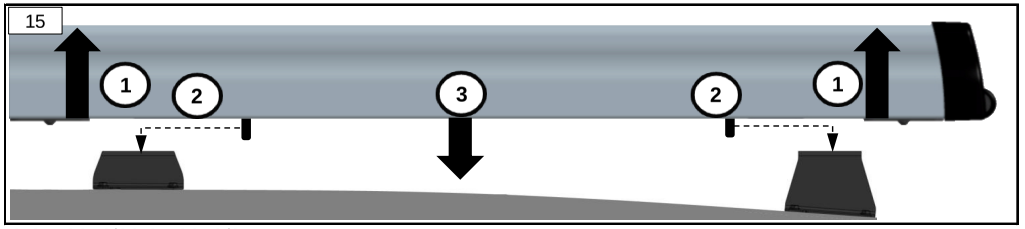

© 9778846/29-05-2019/6

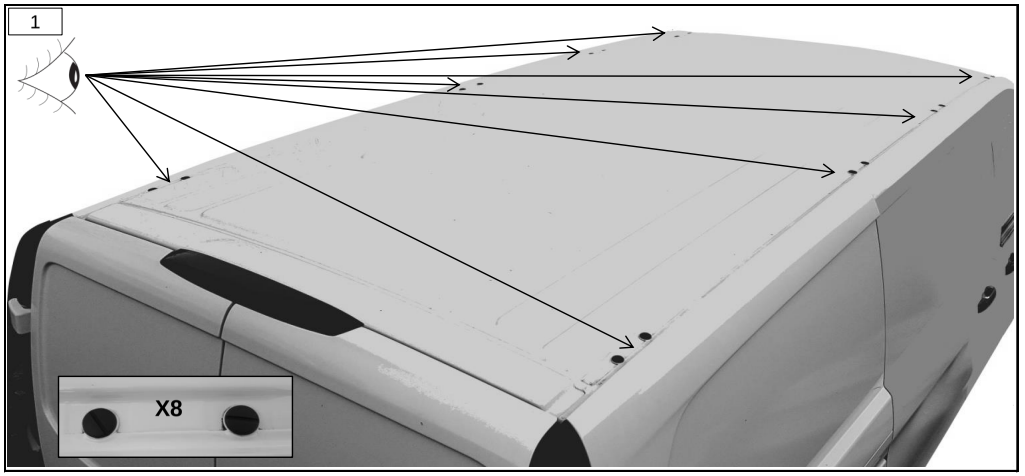

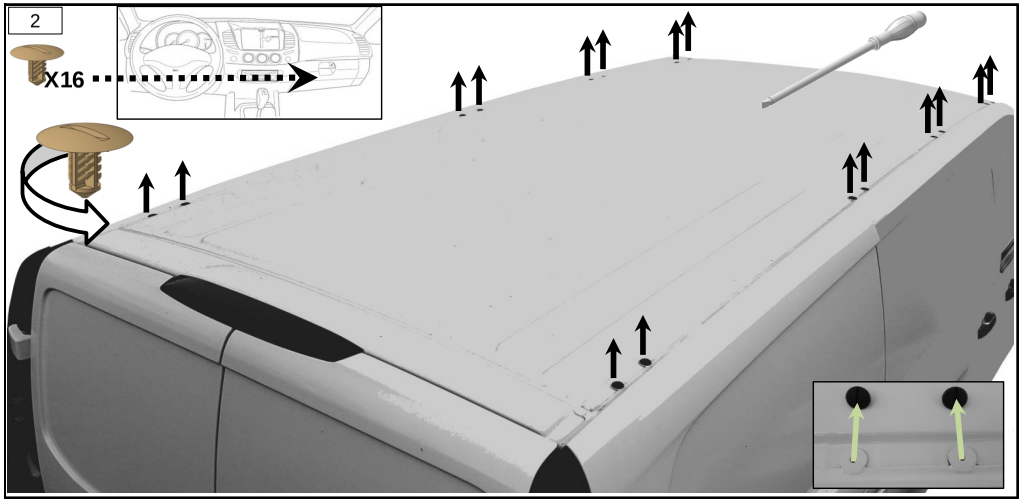

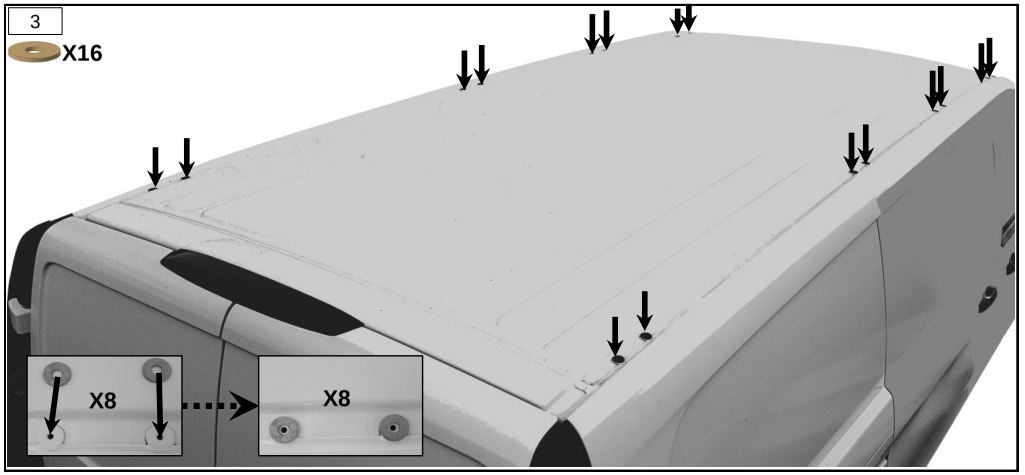

© 9778846/29-05-2019/3

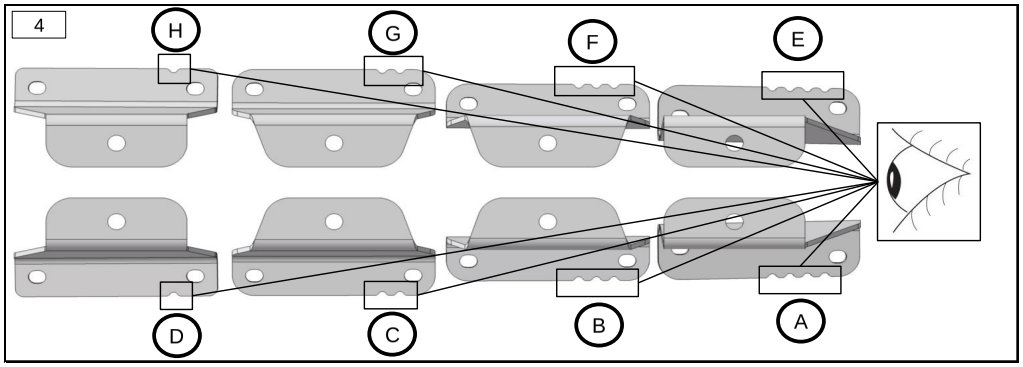
4
H
G
F
E
D
C
B
A

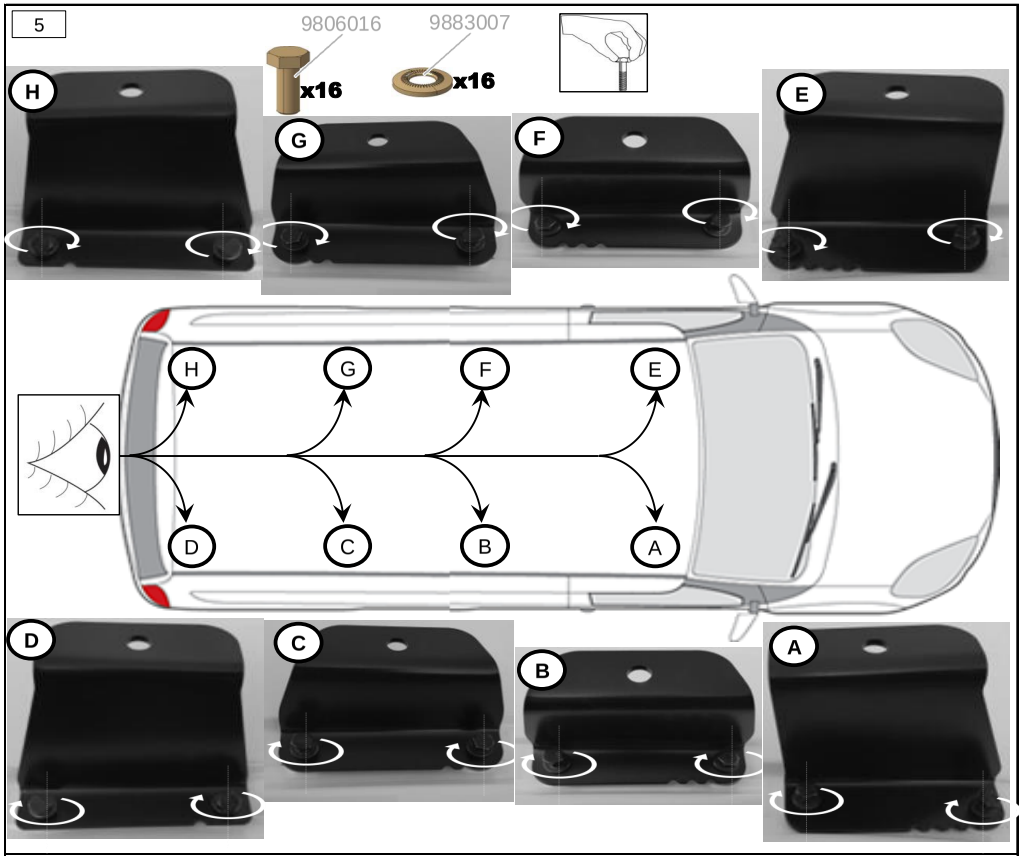
5
9806016
x16
9883007
x16
H
G
F
E
D
C
B
A

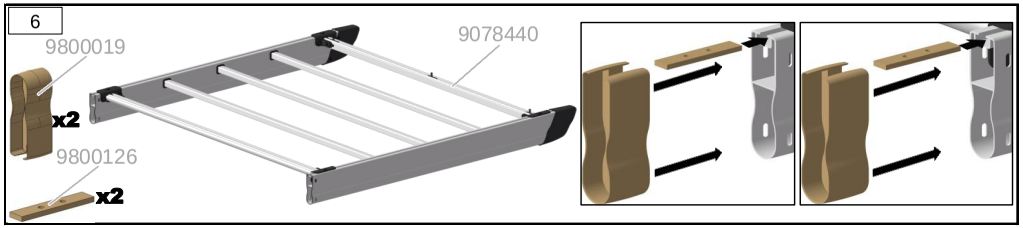
6
9800019
x2
9800126
x2
9078440

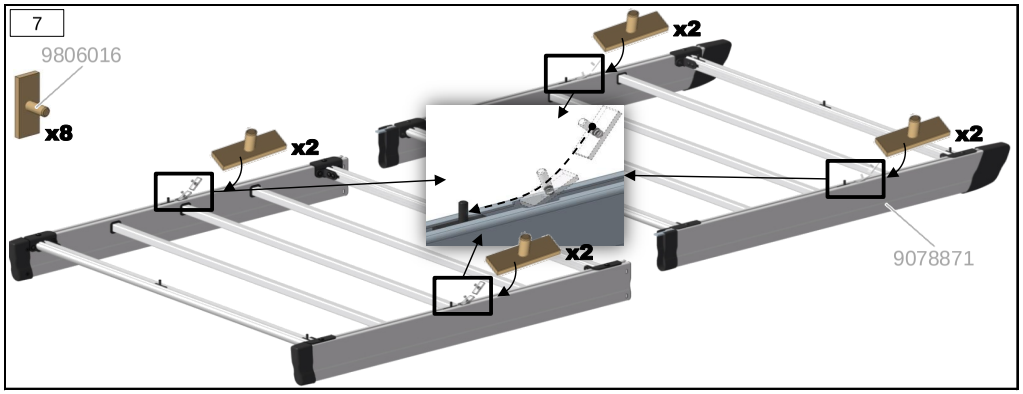
7
9806016
x8
x2
x2
x2
x2
9078871

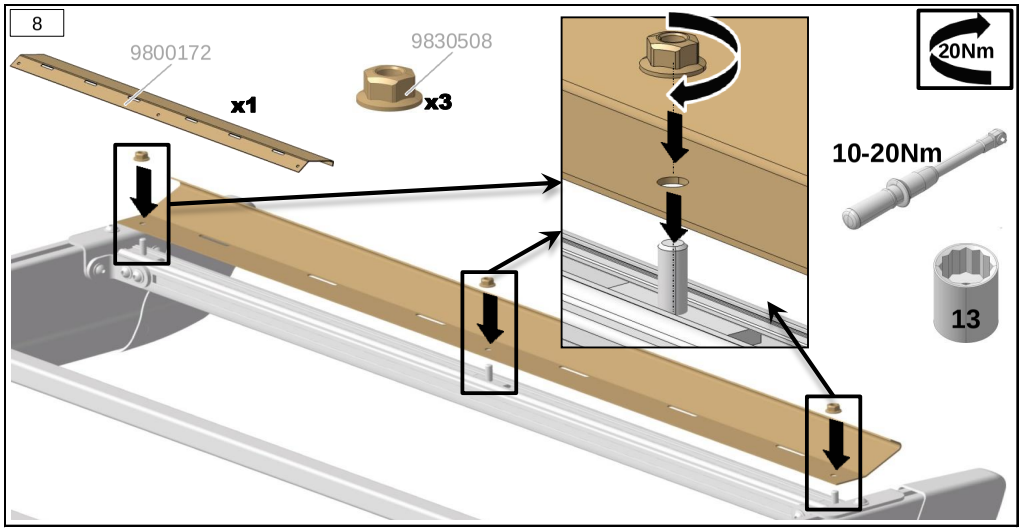
8
9800172
x1
9830508
x3
20Nm
10-20Nm
13

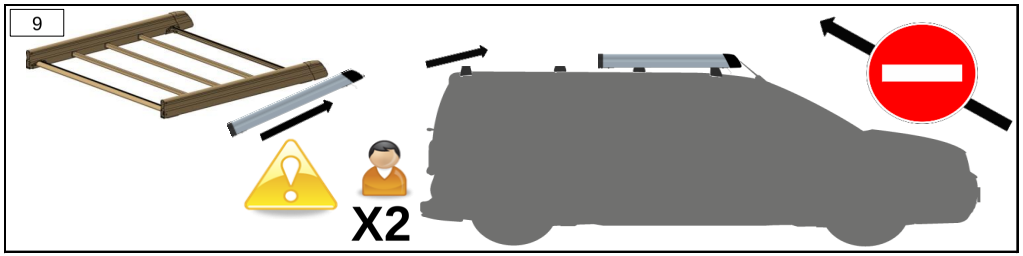
9
X2

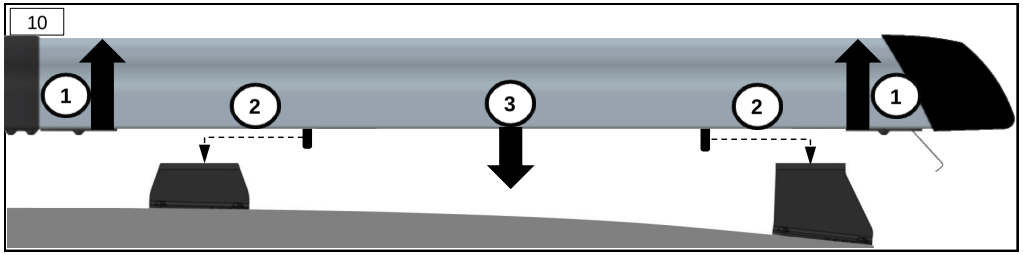
10
1
2
3
2
1